ClearSpan™ Manure/Compost Building
26' Wide

Photo may show a different but similar model.

STK#	DIMENSIONS
PB02600R3/R4	26' W x 12' H x 40' L
PB02602R3/R4	26' W x 12' H x 100' L
PB02604R3/R4	26' W x 12' H x 200' L

©2011 ClearSpan™
All Rights Reserved. Reproduction
is prohibited without permission.

WARNING: Cancer and Reproductive Toxicity - P65Warnings.ca.gov

Revision date: 04.14.11

YOU MUST READ THIS DOCUMENT BEFORE YOU BEGIN TO ASSEMBLE THE SHELTER.

Thank you for purchasing this ClearSpan™ shelter. When properly assembled and maintained, this product will provide years of reliable service. These instructions include helpful hints and important information needed to safely assemble and properly maintain the shelter. Please read these instructions ***before*** you begin.

If you have any questions during the assembly, contact Customer Service for assistance.

SAFETY PRECAUTIONS

- Wear eye protection.
- Wear head protection.
- Wear gloves when handling metal tubes.
- Use a portable GFCI (Ground Fault Circuit Interrupter) when working with power tools and cords.
- Do not climb on the shelter or framing during or after construction.
- Do not occupy the shelter during high winds, tornadoes, or hurricanes.
- Provide adequate ventilation if the structure is enclosed.
- Do not store hazardous materials in the shelter.
- Provide proper ingress and egress to prevent entrapment.

ANCHORING INSTRUCTIONS

Prior to assembling this shelter, please read the anchoring precautions and instructions included with the kit. Anchoring instructions are included in the *MUST READ* document. *You must anchor the building after the frame is assembled and before the cover is installed.*

WARNING: The anchor assembly is an integral part of the shelter construction. Improper anchoring may cause shelter instability and failure of the structure. Failing to anchor the shelter properly *will void the manufacturer's warranty* and may cause serious injury and damage.

LOCATION

Choosing the proper location is an important step before you begin to assemble the structure.

The following suggestions and precautions will help you determine whether your selected location is the best location.

- Never erect the structure under power lines.
- Identify whether underground cables and pipes are present *before* preparing the site or anchoring the structure.
- Location should be away from structures that could cause snow to drift on or around the building.
- Do not position the shelter where large loads such as snow and ice, large tree branches, or other overhead obstacles could fall.

SITE

After choosing a location, proper preparation of the site is essential. The following site characteristics will help ensure the integrity of the structure.

- The support structure must be level to properly and safely erect and anchor the frame.
- If the site is not level, use footing to provide a secure base for the structure. Pre-cast concrete blocks, pressure-treated wood posts, or poured footings are all acceptable when properly used.
- Drainage: Water draining off the structure and from areas surrounding the site should drain away from the site to prevent damage to the site, the structure, and contents of the structure.

WARNING: The individuals assembling this structure are responsible for designing and furnishing all temporary bracing, shoring and support needed during the assembly process. For safety reasons, those who are not familiar with recognized construction methods and techniques *must seek the help of a qualified contractor.*

ASSEMBLY PROCEDURE

Following the instructions as presented will help ensure the proper assembly of your shelter. Failing to follow these steps may result in an improperly assembled and anchored shelter and will void all warranty and protection the owner is entitled to.

The steps outlining the assembly process are as follows:

1. Verify that all parts are included in the shipment. Notify Customer Service for questions or concerns.
2. Read these instructions, the Must Read document, and all additional documentation included with the shipment ***before*** you begin assembling the shelter.
3. Gather the tools, bracing, ladders (and lifts), and assistants needed to assemble the shelter.
4. Check the weather ***before*** you install the roof cover and any panels (if equipped). Do not install covers or panels on a windy or stormy day.
5. Re-evaluate the location and site based on the information and precautions presented in the documentation included with the shipment.
6. Lay out the site (if this has not been completed).
7. Assemble the frame components in the order they are presented in these instructions.
8. Assemble the frame including the bracing (if equipped).
9. Consult the Must Read document for anchoring comments and instructions.
10. Install, tighten, and secure the end panel (if equipped) and main cover. This applies to fabric covers that stretch over the frame assembly.
11. Read the care and maintenance information at the end of these instructions.
12. Complete and return all warranty information as instructed.

LIST OF WORDS AND PHRASES

Before you begin, it is important to become familiar with the words and phrases used in this instruction manual.

These words and phrases are common to most ClearSpan™ shelters and identify the different parts of the shelter. (Some are used in this document. Others may not apply to this particular shelter.) These terms describe the shipped parts and can also be found on the materials list/spec sheets included with the shipment. To aid in the assembly, read through the following definitions before you begin to assemble your shelter.

- **Conduit:** An assembly of pipes used to secure the main cover and end panels (if equipped). Purlins and some strut assemblies also consist of connected pipes to form a conduit. Each pipe joint of a conduit assembly is secured with a self-tapping Tek screw.
- **Coupler or Fitting:** A part of the frame assembly where legs, purlins and rafter pipes are inserted and secured. In most instances, 3-way and 4-way couplers are used. In some larger applications, couplers are used to secure the joints of the different rafter sections during the assembly of the rafters. Some shelters do not use couplers.
- **Foot, Rafter Foot , or Base Plate:** The part attached to and found at the base of the rafter or leg of the shelter. Depending on the shelter, the foot is an optional purchase. Some shelters do not offer an optional foot. Some use 1-way connectors; others use ground posts.
- **Must Read Document:** This document includes building and shelter anchoring instructions, steps for end wall reinforcement, safety precautions, and notices and warnings. The Must Read document is sent with all shelters and buildings. If you did not receive a Must Read document, contact Customer Service to request one.
- **On-Center:** Term used to describe a measurement taken from the vertical center of the rafter or frame member to the vertical center of another.
- **Purlin or Angled (or Lateral) Bracing:** The pipe assemblies that run perpendicular to the rafters or framework that supports the main cover. These assemblies are found on the sides and roof areas of the assembled frame, are evenly spaced, and typically run from the front to the back of the shelter.
- **Plain or Straight Pipe:** A term used to describe a pipe that has the same diameter or width throughout its entire length.
- **Strut:** A strut is usually a length of pipe with two flattened ends and is used for diagonal bracing of the shelter frame. A strut is typically secured to the frame work by special brackets, bolts, and/or clamps.
- **Swaged End or Swaged Pipe:** The term "swaged" refers to the tapered end of the pipe or tube. Swaged ends of a pipe can be inserted into couplers and the straight ends of other pipes of the same diameter.
- **Tek Screw:** A self-tapping fastener used to secure pipe joints and to fasten brackets to rafters.

REQUIRED TOOLS

The following list identifies the main tools needed to assemble the shelter. Additional tools and supports may be needed depending on the structure, location, and application.

- Tape measure or measuring device
- Marker
- Variable speed drill and impact driver (cordless with extra batteries works best)
- Wrenches or ratchet and socket set (recommended)
- Scissors or utility knife
- Tool to cut cable to the required length
- Hammers, gloves, and eye protection
- Ladders, work platforms, and other machinery for lifting designed to work safely at the height of the shelter
- Rope (or straps) for cover installation

UNPACK AND IDENTIFY PARTS

The following steps will ensure that you have all the necessary parts *before* you begin to assemble the shelter.

1. Unpack the contents of the shipment and place where you can easily inventory the parts. Refer to the Bill of Materials/Spec Sheets.
2. Verify that all parts listed on the Bill of Materials/Spec Sheets are present. If anything is missing or you have questions, consult the Pictorial Parts Guide and all shelter diagrams throughout these instructions for clarification, or contact Customer Service.

   NOTE: At this time, you do not need to open the plastic bags containing the fasteners (if used).

QUICK START GUIDE

For a quick overview of this shelter and its components, consult the Quick Start Guide near the back of these instructions.

The pages of the Quick Start Guide show exploded views of all critical connections. Use the diagrams in the Quick Start section to assemble the frame of your building.

Consult the remainder of these instructions for important details that will help during the construction.

SPECIAL NOTE: Baseboards for Frame

These instructions recommend installing a baseboard under the mounting feet along each side of the frame. The baseboard runs from the front to the back of the building.

This baseboard is *not included* with the shipment and must be supplied by the customer. Treated or recycled plastic lumber works well for a baseboard.

The baseboard, when installed properly, helps prevent the shelter from sinking into the ground when anchored. Baseboards also provide a surface to attach rafter feet or other building components.

Consult these instructions, or contact Customer Service for additional information regarding baseboards.

ANTI-BILLOW ROPE INSTALLATION

TO PREVENT DAMAGE AND POSSIBLE INJURY, INSTALL THE ANTI-BILLOW ROPES IN SHORT LENGTHS ALONG EACH SIDE OF THE FRAME.

DO NOT INSTALL AS A SINGLE LENGTH TIED AT EACH END OF THE BUILDING. DOING SO WILL RESULT IN A LOOSE SIDE PANEL IF THE SINGLE ROPE BREAKS DURING STRONG WINDS.

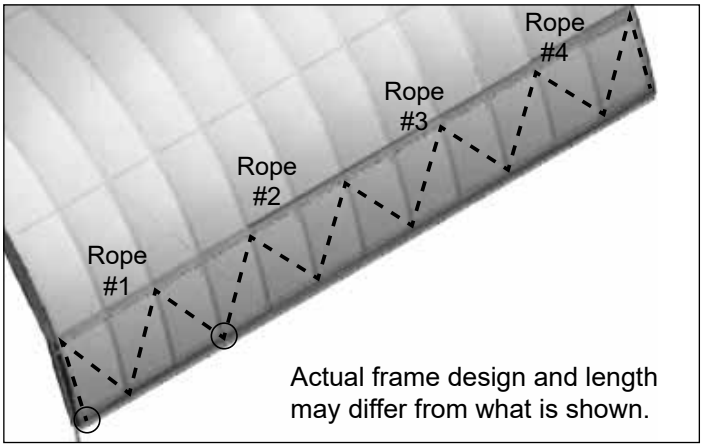

Dotted line represents the anti-billow rope. Circles identify the ends of Rope #1. Actual number of individual ropes along the side may differ.

The following graphics and photos will help you identify the different parts of the building. Consult the Quick Start Guide for additional details and diagrams. (Some parts are not shown.)

FA4482B
Tek Screw

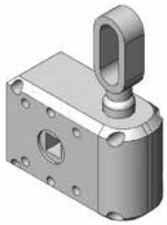

103496
Gearbox

103544
Mounting Plate

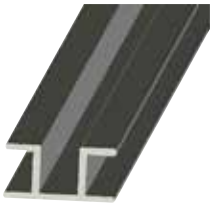

102570
U-Channel

102857
End Clamp

102547
Cross Connector

102569
Roller Bearing

102717
Double Drive Set

QH1400 &
QH1404
Band Clamp

QH1061
Ratchet

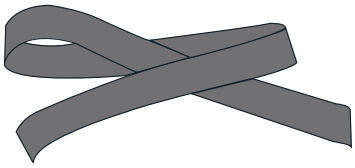

103620b
Plain End Strap

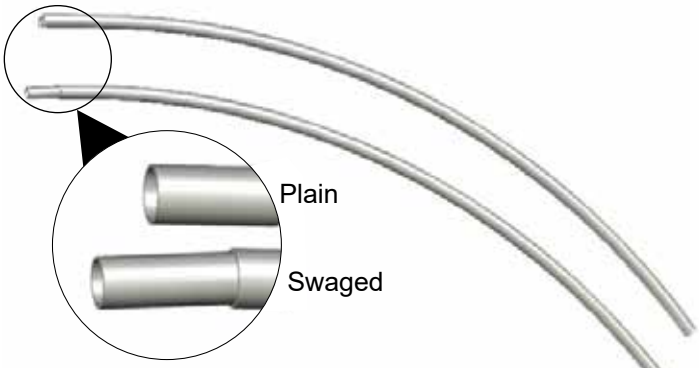

Swaged and Plain Rafter Sections

Photo may show a different but similar model.

ClearSpan™ Manure/Compost Building

The instructions that follow describe assembling all rafters and then constructing the frame. Depending on the number of individuals assisting with the construction, it may be best and more efficient to have someone assemble the rafters and others assemble the frame as rafters are completed.

Other factors to consider during the assembly, especially for buildings longer than 60', include:

- Amount of working area
- Available lifts and work platforms
- Number of assistants

OVERVIEW

This section describes assembling your manure/compost building. For details of each assembly procedure, consult the Quick Start Guide and the individual sections of these instructions. See illustration below to identify main parts of shelter.

1. Layout the site and identify the required parts for each assembly procedure.
2. Assemble all rafters.
3. Assemble and anchor the frame.
4. Prepare and install the main cover.

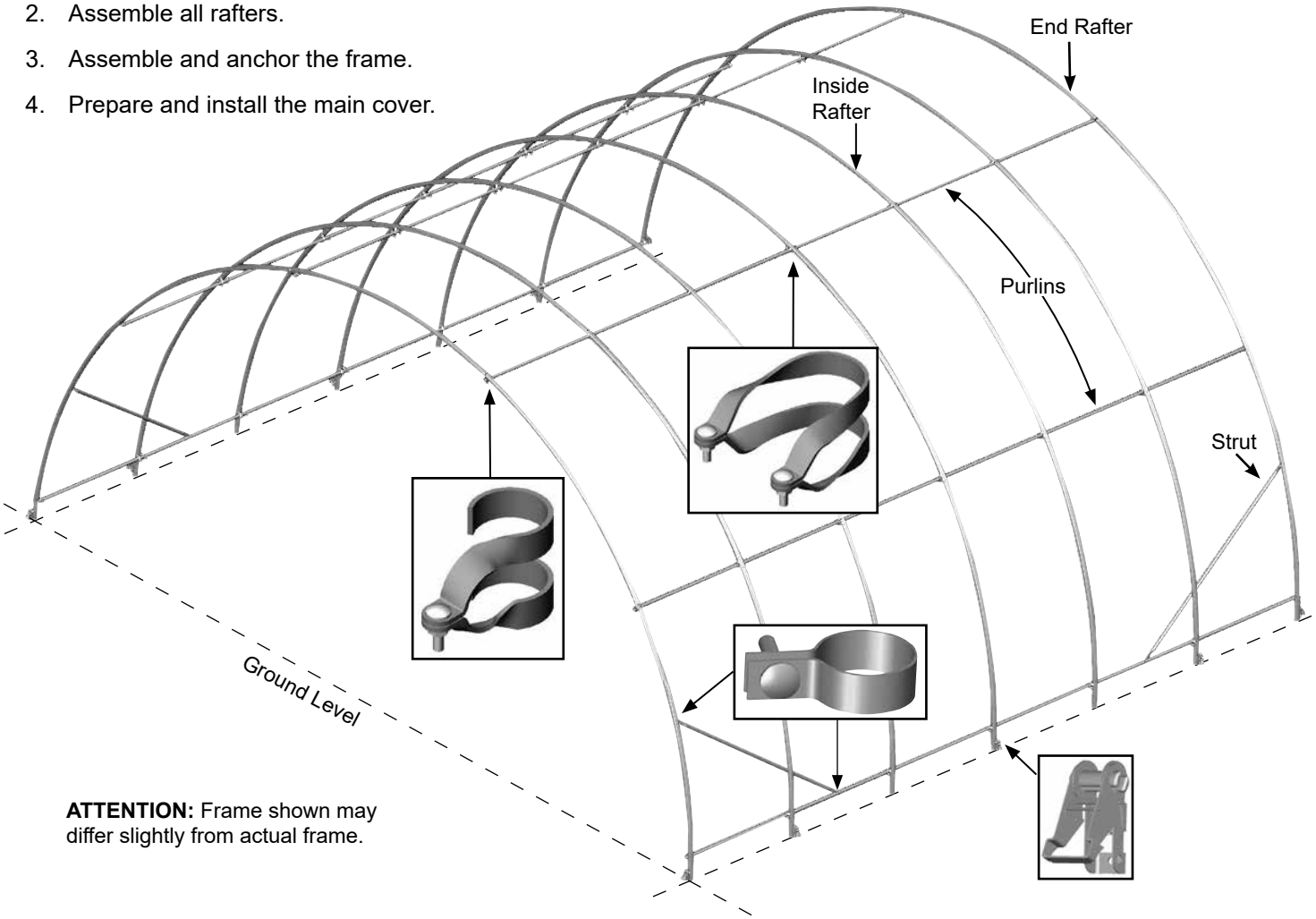

ATTENTION: Frame shown may differ slightly from actual frame.

LAY OUT THE BUILDING SITE

After the site is prepared, identify the location of the shelter corners to help square the frame after it is assembled.

Taking these steps ***before*** assembling the shelter saves time and ensures that the structure is positioned as desired. The following procedure is a suggested method. Its use depends on the size of the shelter, shelter application, the footings, and the method used to anchor the shelter.

SQUARE THE SITE

1. Identify a corner where a building rafter will be positioned, drive in a stake, and string a line the exact width of the building and stake in place. (Width of the rafter is measured from center-to-center of the rafter legs.)
2. String a line at least as long as the building from the first stake at 90°.

   NOTE: A transit can be used to ensure an accurate 90° angle, or the 3-4-5 rule can be used. Refer to diagram. Using multiples of 3-4-5 such as 6-8-10 or 12-16-20 helps to maintain an accurate 90° angle.

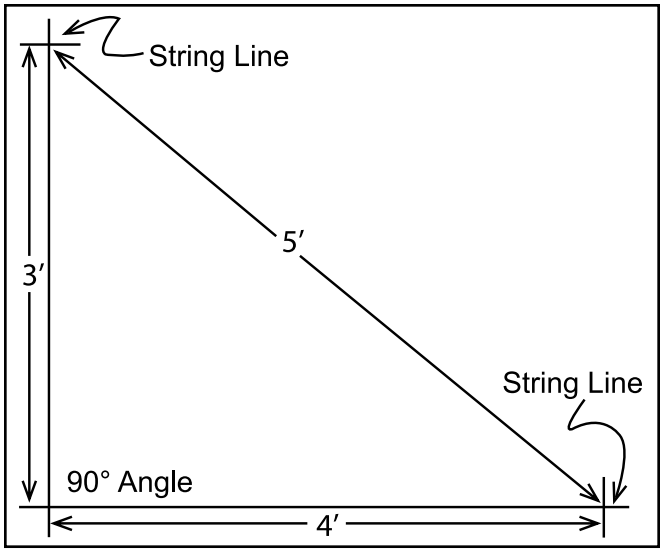

3. After squaring the position of the building and placing a stake at all corners, string a line between the stakes to mark the base of the building.
4. Next, paint or mark a line on the ground using the strings between the stakes as guides.

NOTE: Setting *customer-supplied baseboards* on the site in the correct positions is another way to prepare for the frame assembly.

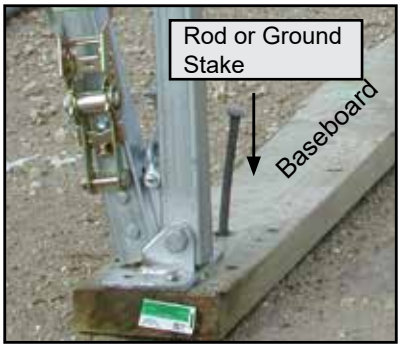

Actual rafter is not shown.

NOTE: If a baseboard is used, drill holes through the board at evenly-spaced intervals along the length of the board. Drive a rod through each hole and into the site to prevent the boards from shifting and to maintain the on-center width of the building.

The baseboards can be "pinned" in place using rods driven into the site through evenly-spaced holes drilled in the baseboard. This prevents the baseboards from shifting during assembly.

For concrete applications (not shown), secure the customer-supplied baseboard to the concrete using the appropriate fasteners purchased locally.

Building width is measured on-center.

5. After marking the outline of the building, continue with the rafter assembly instructions.

ASSEMBLING THE RAFTERS

NOTE: Assistance is required to assemble the rafters.

Gather the parts:

- Rafter pipe (#26R1901)
- Rafter pipe (#26R1902)
- Purlin end clamps (#102857)
- Band clamps (#QH1404)
- Tek screws
- Magnetic nut setter (3/8" x 2-9/16")

Rafter Assembly Procedure

Each rafter assembly consists of five (5) rafter sections: four (4) swaged sections, one (1) plain section.

1. Select the five (5) pipes needed to assemble a rafter and arrange these on a flat surface as shown below for assembly.

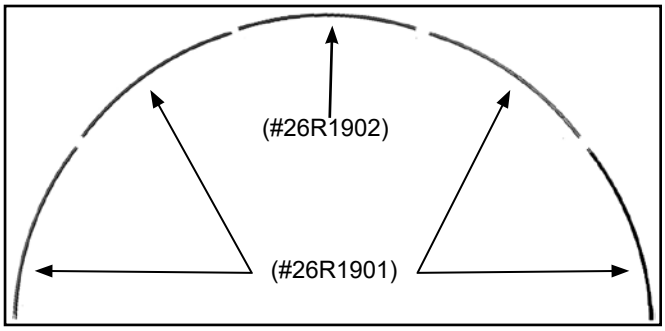

2. Slide the swaged portion of each rafter pipe into the plain end of the pipe as shown.

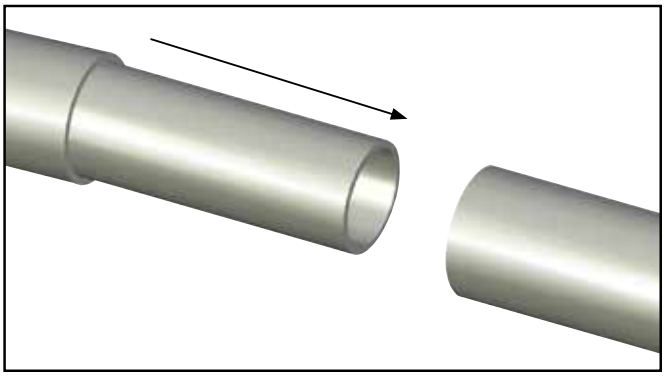

3. With the main rafter pipes seated at each joint and the rafter positioned on a flat surface, secure each joint using a single self-tapping Tek screw. Position Tek screw approximately 1" from pipe joint.

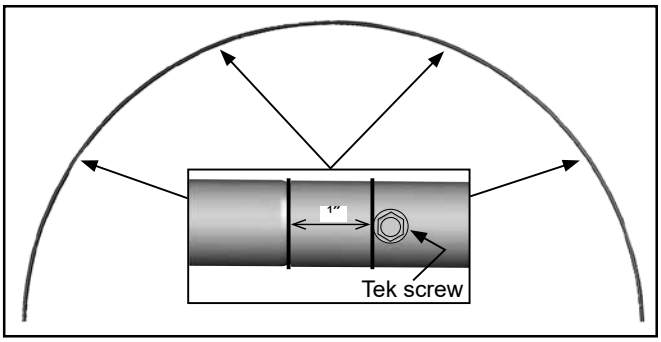

ATTENTION: Install the screws so they will not touch the cover once it is installed. This is typically on the backside of the rafter, which will be the surface visible from the *inside* of the shelter once the frame is assembled.

Install the screw so that it secures the outer pipe to the swaged end of the inside pipe at the joint.

4. Assemble all rafters as described and continue with the additional steps to assemble the two end rafters.

END RAFTER ASSEMBLY

In addition to the steps in the previous procedure, complete the following steps *for the two end rafters only*.

1. Take one of the assembled rafters and place it on a flat surface.
2. Slide six (6) end clamps and two (2) band clamps onto the rafter in the locations noted below. (Do not secure the clamps to the rafter at this time. These clamps are repositioned during the frame assembly when the purlins are added.)

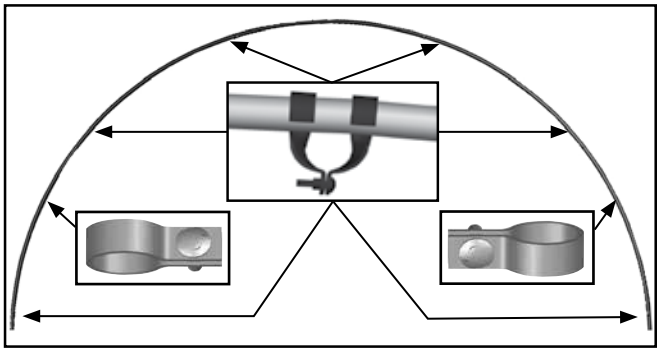

View of the end rafter and clamps as shown is from the *outside* when the frame is assembled.

NOTE: Position all clamps as shown. Use a piece of duct tape to keep the clamps from sliding when the rafter is set in place if desired.

RAFTER ASSEMBLY (CONTINUED)

View below shows how to position all end clamps to prepare for the frame assembly. Purlin pipe shown is installed during the frame assembly procedure.

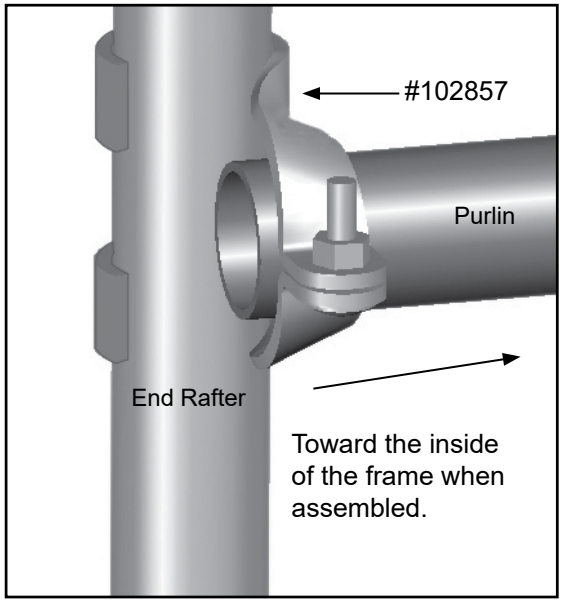

3. Repeat the same procedure for the final end rafter.
4. Continue with the FRAME ASSEMBLY instructions that follow.

Space below is reserved for customer notes.

FRAME ASSEMBLY

Gather the parts:

- All rafter assemblies
- Band clamps (#QH1400) and cross connectors (#102547)
- Struts (#QH1308) and Tek screws
- Pipe 1.315" x 75" swaged and pipe 1.315" x XX" plain

ATTENTION: The XX" represents the designated length required to reach the end of the building. See chart below.

Building Length	Purlin Pipe Lengths
40'	(6) 75" & (1) 49.5"
100'	(16) 75" & (1) 49.5"
200'	(33) 75" & (1) 25.5"

Frame Assembly Procedure

1. Stand one end rafter. The end rafters include the end clamps. Be sure to position the bolt side of end clamp *to the inside of the frame* when setting the rafter in position. See the diagram below.

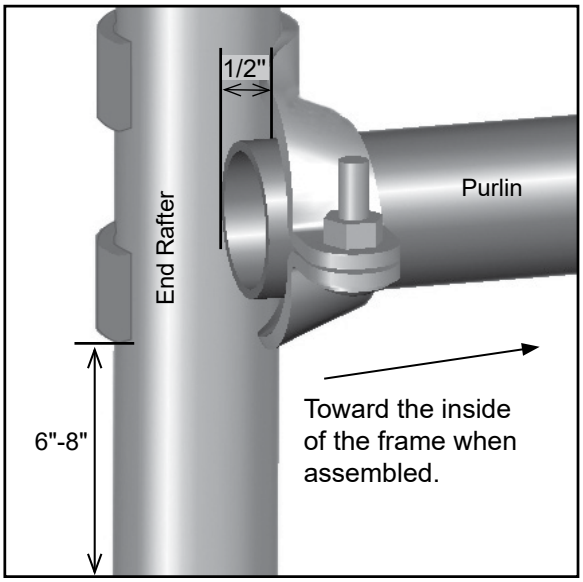

NOTE: Purlin pipe shown in the above diagram is installed during the frame assembly.

2. Check that the rafter is standing straight (plumb) and brace it in place.

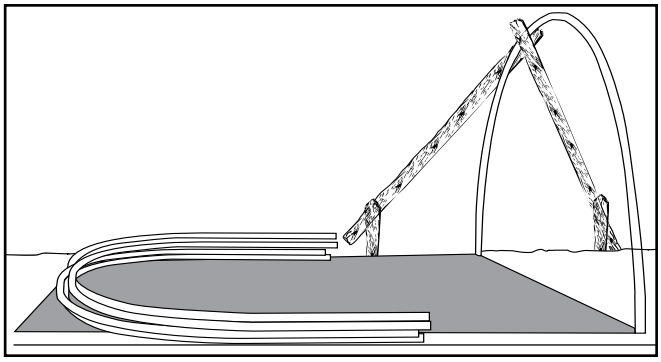

3. Using the on-center, rafter-to-rafter spacing, set an inside rafter in position. (Additional assistants are required to hold the inside rafter in position.) See chart below for correct rafter spacing.

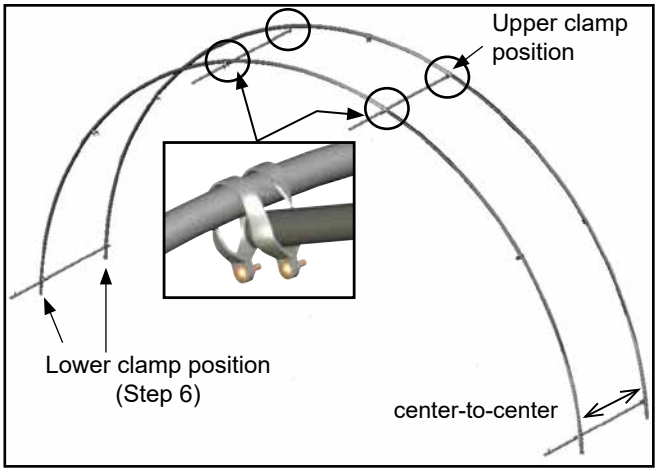

SKU #	Rafter Spacing
PB02600R3 / PB02602R3 / PB02604R3	34 1/4"
PB02600R4 / PB02602R4 / PB02604R4	48"

4. Install the upper two (2) cross connectors on the inside rafter and insert a purlin pipe through each connector and through the upper end clamps near the top of the end rafter. See circles above.
5. Verify that both rafters are plumb and properly spaced on-center and tighten the upper clamps.

CAUTION: To prevent cover damage, the ends of the purlins should extend no more than ½" past the end clamp. See diagram that follows Step 1. Do not allow purlin to extend beyond the edge of the end rafter.

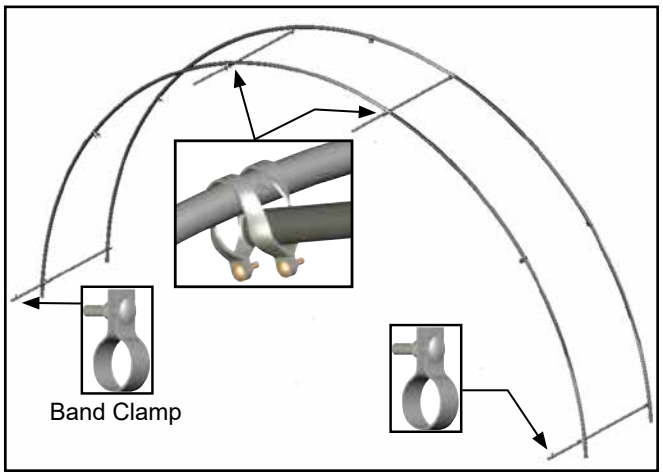

6. Move to the lower clamp positions and repeat Step 4 to install the purlin pipes in those locations. See the diagram above.
7. Slide a band clamp (#QH1400) on each of the two bottom purlins between the second and third rafters. Position the head of each band clamp bolts toward the outside of the shelter.

FRAME ASSEMBLY (CONTINUED)

8. Move to the lower end of the rafters, verify that the position of the purlin is 6"-8" above the finished grade, and tighten the lower clamps and connectors.

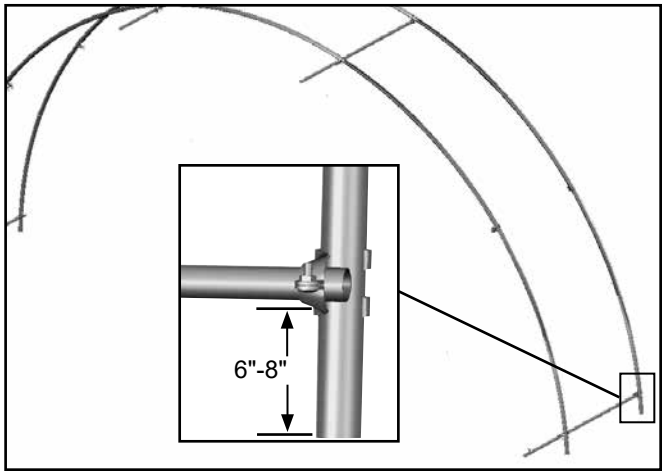

9. Install the remaining two (2) cross connectors and purlins. Verify that the rafter spacing is on-center for the shelter and tighten the connectors. See circles below.

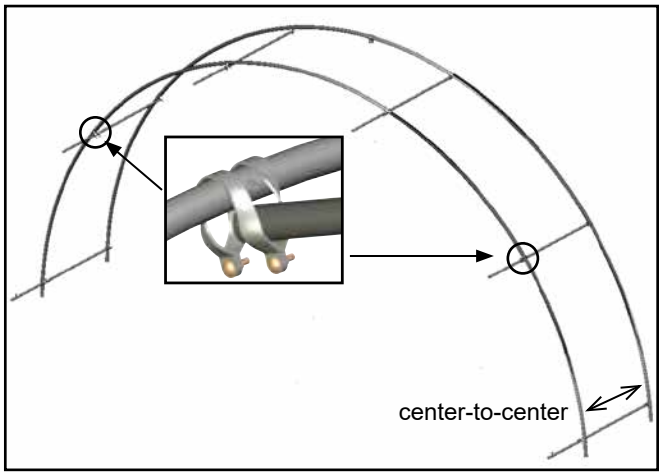

10. Continue adding rafters and purlins until the frame is nearly complete.

    NOTE: Remember to add band clamps to the lower purlins between the second and third rafter at the remaining end of the frame for the installation of the struts. Review Step 1 to set the final end rafter.

11. Finish each purlin with the XX" pipe that matches the building length (see previous chart) and use the final end rafter to complete the assembly.

    NOTE: To prevent cover damage, DO NOT allow the purlin to extend beyond the end rafter.

If the last end rafter is plumb and the purlin run extends beyond the end of the rafter, cut the last section of purlin pipe to the required length.

Typically purlin pipes *do not* require cutting. *Verify that the finished purlin run has the correct plain pipe before cutting any pipe. Consult the Side Profile diagrams in the Quick Start section for pipe identification.*

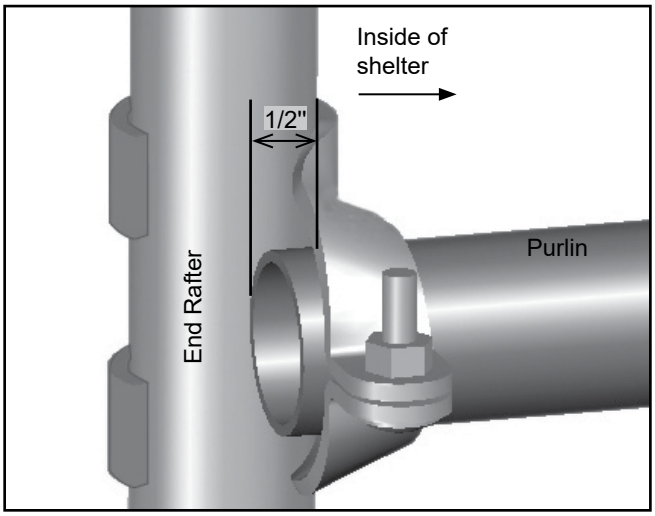

CAUTION: To prevent cover damage, the ends of the purlins should extend no more than ½" past the end clamp. Position the bolt side of the end clamps to the inside of the shelter as shown.

Strut Installation Procedure

1. After the rafter assembly is complete, verify that the band clamps are in the proper location. See diagram below.

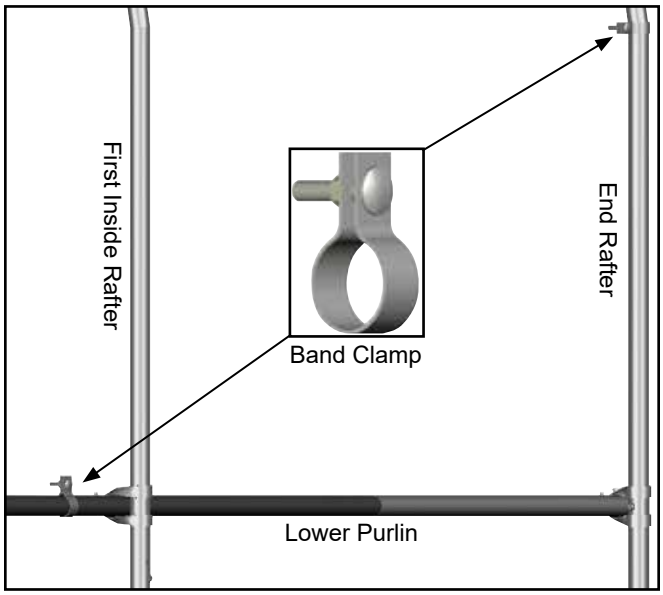

Positions of band clamps depend on the rafter spacing and may differ slightly from what is shown.

FRAME ASSEMBLY (CONTINUED)

2. Remove the bolts and attach a strut between the band clamp on the purlin and the band clamp on the end rafter. Position the strut so that it forms a triangle as shown below.

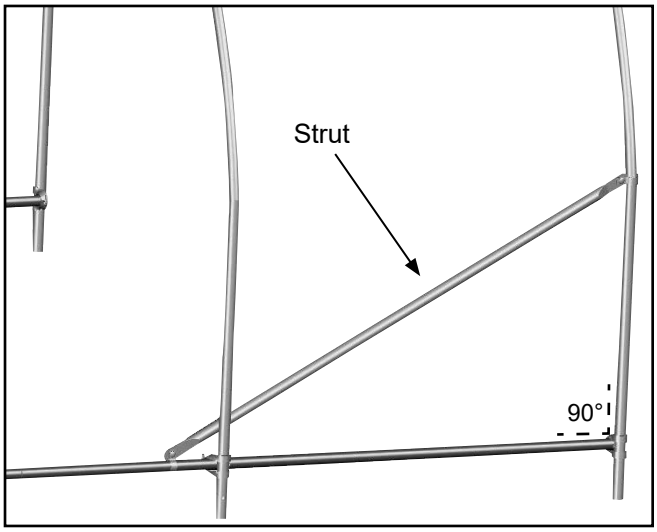

NOTE: Verify that the bolt heads are to the outside of the shelter and tighten the nuts.

3. Install the remaining struts and tighten all band clamp bolts.
4. Secure each band clamp to the purlin and rafter using a Tek screw for each connection.
5. Return to each purlin joint and secure using a Tek screw.

SQUARE THE ASSEMBLED FRAME

Gather the parts: Measuring tape and Tek screws

Complete these steps:

1. Square the frame by measuring diagonally corner-to-corner and align all rafters as shown below.

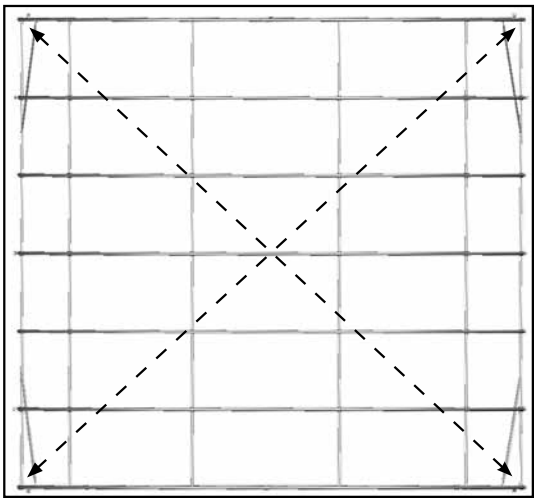

FRAME TOP VIEW

2. Verify that the width of each rafter is 26' center-to-center. The frame is square when the two diagonal measurements are the same. See previous diagram.
3. Continue by anchoring the frame.

ANCHOR THE FRAME

Once the frame is anchored properly, continue with these instructions.

WARNING: Securing the rafter mounting feet (if equipped) to baseboards set on the site is not a substitute for properly anchoring the shelter. You must anchor the shelter as described in the MUST READ document.

FAILING TO PROPERLY ANCHOR THE SHELTER WILL RESULT IN DAMAGE TO THE SHELTER AND MAY CAUSE PERSONAL INJURY.

READ THE MUST READ DOCUMENT TO PROPERLY ANCHOR THE SHELTER.

After anchoring the frame, check the frame for rough edges as described in the following procedure.

FINAL FRAME CHECK

1. Return to the frame connections and verify that all bolts are tight.
2. Verify that each purlin splice is secured with a Tek screw.
3. Verify that each purlin is secured to the end clamp and cross connector and that each cross connector and end clamp is secured to the rafter. See diagram below.

ATTENTION: Rafter shown may differ from the actual rafter. Steps to secure the purlin to the connector and the connector to the rafter are the same. Position the Tek screws so they will not touch the cover once it is installed.

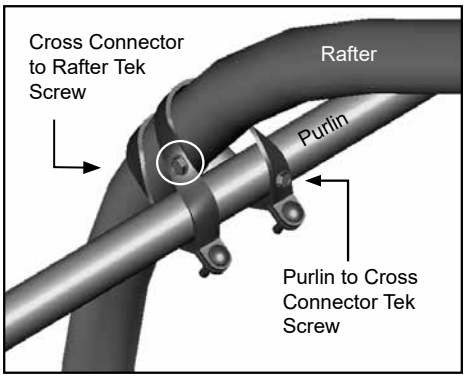

4. Inspect the frame for sharp areas that could damage the cover. If found, file smooth and cover with layers of duct tape to protect the cover.
5. Verify that all bolts are positioned with the heads to the outside of the frame. Tape the bolts and rafter joints *before* installing the cover.
6. Continue by installing the main cover.

PREPARE MAIN COVER

Gather the parts:

- Ratchets (QH1061)
- Cover conduit pipe (see chart)
- Cover
- Tek screws
- Duct tape

The sides of the cover are attached to the inside rafters using ratchets with straps. The ends of the cover (front and back) are attached to the end rafters using ratchets from the outside. The straps to secure the ends of the main cover are pre-installed in the cover.

NOTE: When handling the main cover and setting it in position, do not pull on the end straps. They will pull out of the cover.

WARNING: To prevent damage to the cover and to prevent serious personal injury, DO NOT attempt to install the main cover on a windy day.

Assembly Procedure

1. Fasten a ratchet *to the outside of each end rafter* using a Tek screw in the bottom hole of the ratchet as shown below.

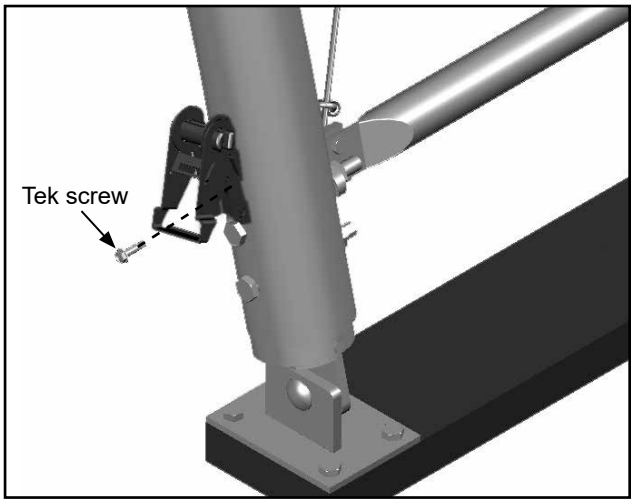

NOTE: Ratchet design may differ from actual ratchet.

2. Repeat this step at the remaining three corners.

3. Attach the remaining ratchets to the inside surface of the interior rafters using a Tek screw. Install the ratchets approximately 4' up from the ground.

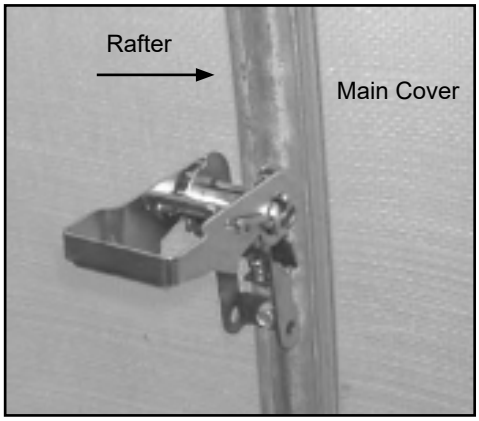

NOTE: Consult the Side Profile diagrams in the Quick Start section for ratchet location for your frame.

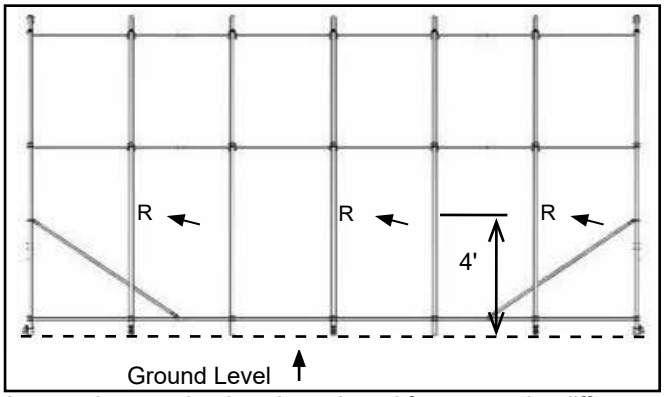

Arrows show ratchet locations. Actual frame may be different from the frame shown. Consult the Side Profile diagrams.

4. Assemble two (2) cover conduits. These conduits are the same length. Start each conduit with one plain pipe and add swaged pipes to arrive at the correct length.

NOTE: Conduits can be pre-assembled, or they can be assembled as they are inserted into the cover pockets. (The latter works best for longer frame lengths.)

Consult the table that follows to select the correct pipe for your frame length. Each main cover conduit consist of these pipes:

Cover Conduit Pipe Lengths	
Building Length	Pipe Lengths
40'	(6) 75" & (1) 49.5"
100'	(16) 75" & (1) 49.5"
200'	(33) 75" & (1) 25.5"

5. Secure each conduit pipe joint using a Tek screw. Wrap two layers of duct tape over the pipe joint and Tek screw head to protect the cover.

PREPARE MAIN COVER (CONTINUED)

6. After assembling the cover conduits, unfold the main cover on a clean, smooth surface near the frame.

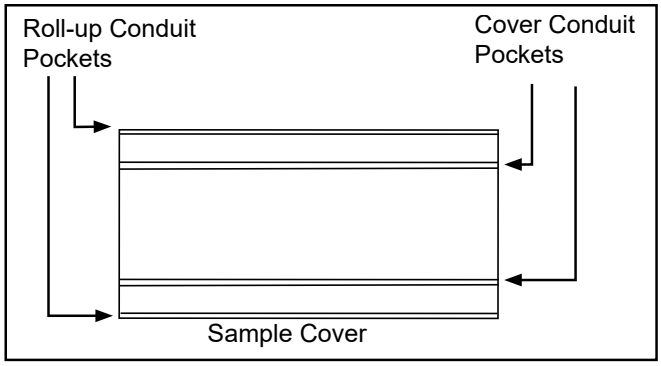

NOTE: Unfold the main cover with the inside surface facing up.

7. Locate the cover ends with strapping and align with the front and back of the shelter.

8. Insert one cover conduit into each of the pockets nearest the center of the main cover as shown below.

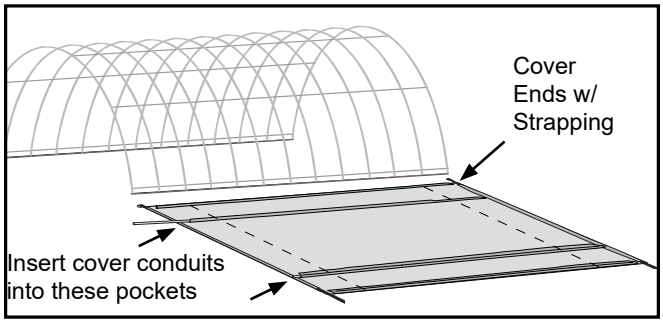

Frame shown may differ from actual frame.

NOTE: Stretch pockets are found on covers for buildings longer than 48'. See dashed lines above.

9. Continue by pulling the main cover onto the frame.

ATTACH MAIN COVER

Gather the parts:

- Main cover (with conduits already inserted)
- Ropes long enough to reach over the frame (provided by customer)
- 1" plain strap (#103620)
- Tek screws
- Box cutter or utility knife

Assembly Procedure

1. To pull the cover over the frame, attach a rope to each end of the cover conduit farthest from the frame. Wrap the rope around the conduit a few times to prevent it from slipping off. *May not be required for small covers*.

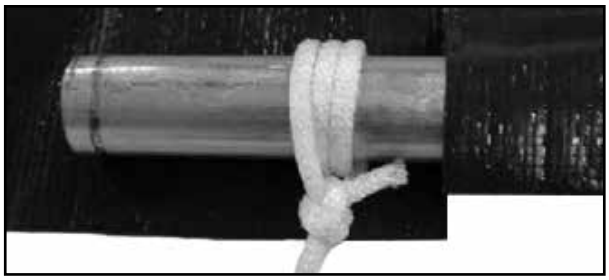

NOTE: Depending on the length of the cover it may be necessary to attach additional ropes to the cover conduit between the end ropes. Cut a small opening in the cover pocket and tie the rope around the conduit. DO NOT cut through the main cover. *Cut through the conduit pocket only.*

2. With all ropes attached to the cover conduit, lift the conduit and rope and carry it toward the base of the frame.

3. Toss the ropes over the frame and pull the cover into position. One person is required at each rope.

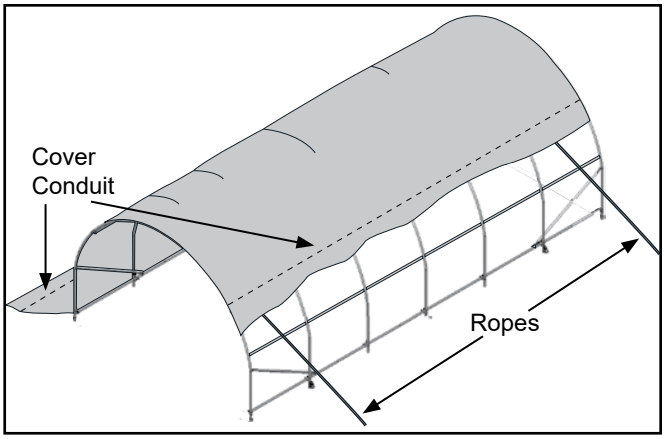

4. Once the main cover is pulled into position, center the cover on the frame. Use ropes to temporarily secure cover to frame

ATTACH MAIN COVER (CONTINUED)

5. Feed the bonnet straps through the four (4) ratchets attached to the corners of the frame and tighten only enough to hold the cover in place.

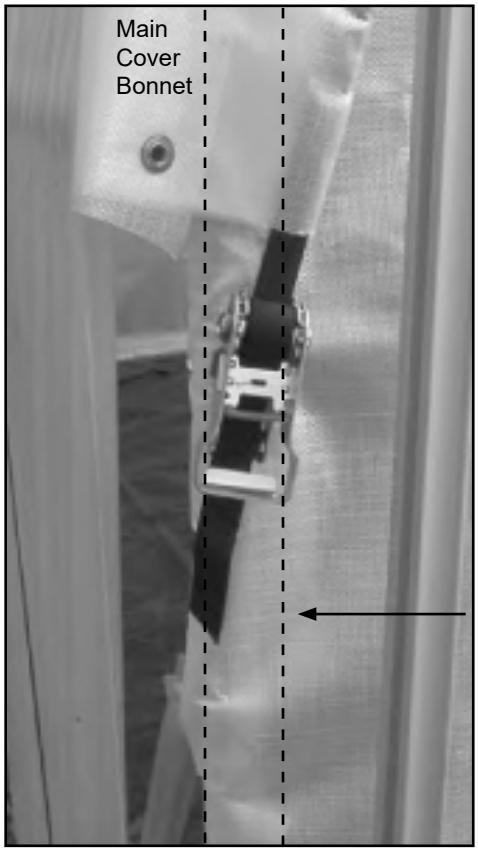

Actual frame may differ.

Dashed line shows the location of the end rafter.

6. Move to the inside of the building and make sure the cover is centered front-to-back and side-to-side.

7. Slit or notch the cover conduit pocket at each rafter where a ratchet is attached.

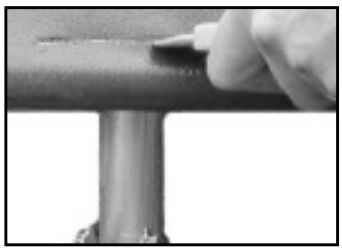

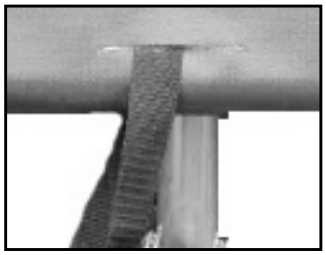

NOTE: Do not cut the cover, cut only the pocket containing the cover conduit.

8. Cut a section of 1" strap from the bulk roll (some straps come pre-cut for some buildings) and insert one end of the section through the sleeve opening, around the cover conduit, and back through the opening.

NOTE: To reduce strap waste, measure the strap length (and adjust if needed) *before* cutting additional straps.

9. Feed both ends of each strap into a ratchet and tighten the ratchet only enough to hold the cover snug.

10. Verify that the cover is centered on the frame then tighten all side ratchets evenly until snug.

NOTE: To remove excess strap that binds up in the ratchet, loosen the ratchet, shorten the strap, and retighten. Do not over-tighten the straps.

11. Move to the end rafters and slightly tighten the corner ratchets. Do not over-tighten.

12. After all side security straps are in place and *slightly tightened* and the cover is centered evenly on the frame, complete the following steps to install the roll-up conduit.

INSTALL THE ROLL-UP CONDUIT

The roll-up conduit is inserted into the pocket at the edge of the main cover on both sides. The roll-up conduit is attached to the twist-of-the-wrist assembly, which rolls up the lower section of the main cover.

Complete the following steps:
These conduit assemblies consist of the following pipes:

Roll-up Conduit Pipe Lengths	
Building Length	Pipe Lengths
40'	(6) 75" & (1) 49.5"
100'	(16) 75" & (1) 49.5"
200'	(33) 75" & (1) 25.5"

NOTE: The conduits can be assembled at once or in short sections. Secure each joint with a Tek screw and use duct tape to tape the joint and screw to protect the cover.

1. Locate the required 1.315" pipes and assemble the two lengths as previously described.
2. Secure each joint with a Tek screw and tape the joint to protect the cover pocket.
3. Insert one assembled conduit into one of the remaining pockets of the main cover.
4. Repeat for the remaining conduit.
5. After both roll-up conduits are installed, all side security straps are in place and slightly tightened, and the cover is centered evenly on the frame, complete one of the following:
   - If your building is 40' long (skus: PB02600R3 or PB02600R4), skip the next procedure and tighten the side ratchets as described on page 19.
   - If your building is longer than 48', complete the following procedure to install the PVC cover conduit.

INSTALL THE PVC CONDUIT FOR MAIN COVER ENDS

Complete this section if the building is longer than 48'. The PVC conduit is inserted into notched pockets at each end of the main cover. Strapping is then threaded around the conduit and the end rafters. This strapping is evenly tightened to stretch the main cover end-to-end.

Required parts and tools:

- LJ2842 (3/4" PVC conduit) and 103620D (1" strap)
- Duct tape, Tek screws, and driver for Tek screws
- Tool to cut strap, a lift or ladders to reach top of frame, and assistants to install and tighten strap

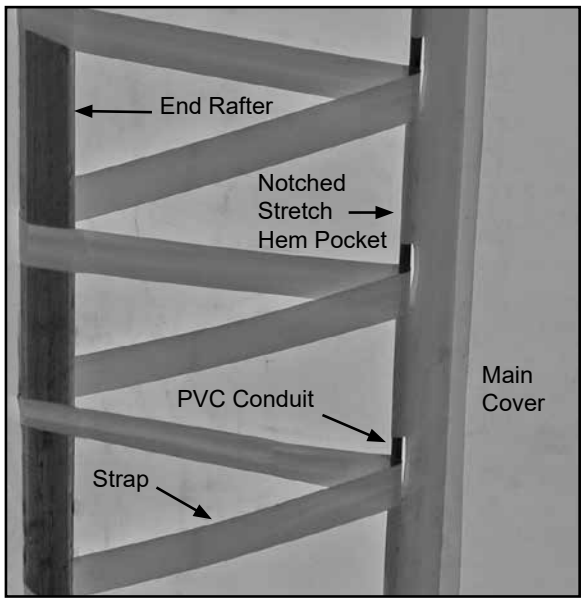

Photo shows the stretch pocket and the conduit and strapping as installed for a similar main cover. View shows the cover as seen when standing inside the frame looking up at the end rafter.

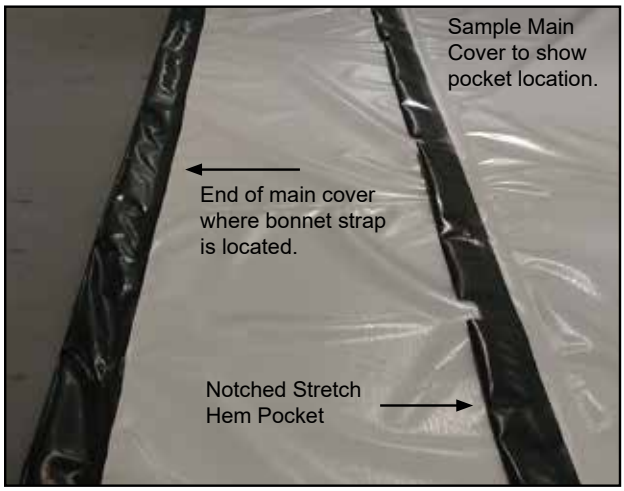

Photo above shows a similar cover and the location of the stretch pocket. Cover is shown with the underside facing up, which is the side visible from inside the frame when the cover is installed.

PVC conduits are installed near the ends of the main cover to provide an additional tie-down position. Complete these steps to install the conduit and strapping for the stretch pockets of the main cover.

1. Take the first section of PVC conduit and feed it into the stretch pocket from the bottom at one end of the cover. *Insert the plain end of the conduit into the pocket so the next section can be joined to the first.*

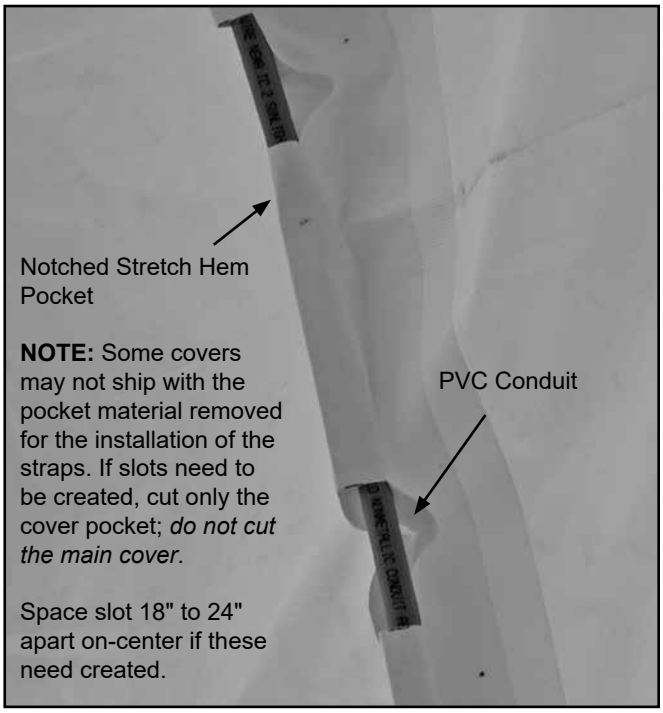

Photo shows the notched stretch pocket and the installed PVC conduit at the end of a similar main cover.

2. Once the bell end reaches the pocket, take another section of PVC conduit, insert the plain end into the bell end of the previous section and secure the joint using a Tek screw or customer-supplied PVC glue.

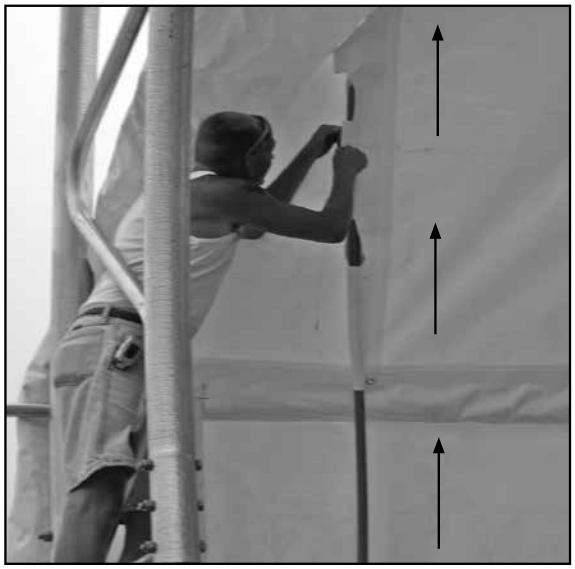

NOTE: Wrap the Tek screw and joint using duct tape.

INSTALL PVC CONDUIT (CONTINUED)

3. Repeat the steps and continue to assemble and feed the PVC conduit into the pocket.

4. Once the PVC conduit is fully assembled, secured at the joints, and inserted into the pocket, repeat the steps for the remaining end of the main cover.

5. With both PVC conduits assembled and installed, verify that the cover is centered on the frame (side-to-side and end-to-end) and move to one end rafter.

6. Take the rope or strap used to pull the cover and cut a few sections long enough to tie the PVC conduit to the end rafter in evenly spaced locations. See example in the photo below.

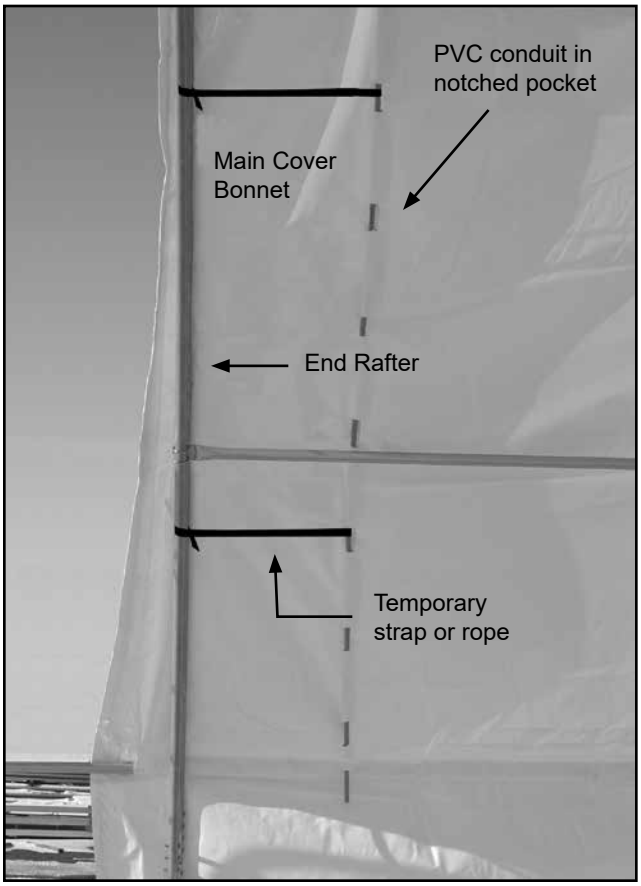

Photo shows temporary straps tied between the PVC conduit and the end rafter to keep the main cover centered on the frame as the strapping at the other end of the frame is installed. Cover used for illustration only. Actual cover may differ from what is shown.

7. Move to the end of the frame opposite the end where the temporary straps were tied, take one end of the bulk roll of 1" strapping, and weave it around the end rafter and PVC conduit.

8. Continue weaving the strap around the end rafter and PVC conduit working up and over the rafter and down to the other end of the PVC conduit.

   NOTE: Keep the strapping snug during this step, but do not over tighten. Also, maintain an even distance between the top of the end rafter and the PVC conduit.

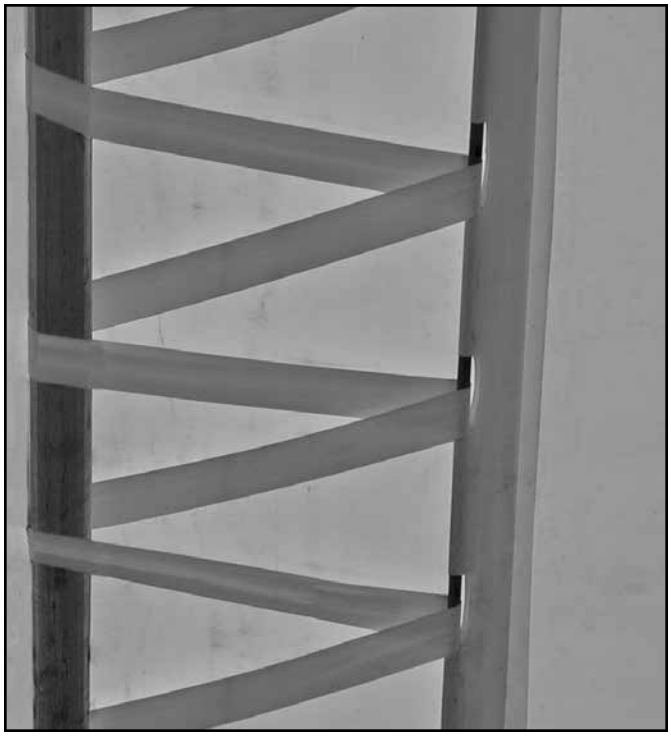

Photo shows how to weave strap around the conduit inside the main cover pocket and the end rafter. (Cover and rafter shown differs from actual cover.) Distance between the conduit in the pocket and the end rafter is even.

9. After weaving the strapping, cut the strap and tie it to the end rafter to temporarily secure it.

10. Take the remainder of the bulk strap roll, move to the other end of the frame, and repeat the steps to weave the strap between the PVC conduit and the top of the end rafter.

    NOTE: The temporary rope or straps at this end can be removed once the main strapping is in place.

11. After the strap is completely installed at this end, cut the strap to length and tie it to the end rafter.

INSTALL PVC CONDUIT (CONTINUED)

12. Beginning at either end of the cover, tighten the strap. The strapping will pull against the strapping installed at the other end of the frame.

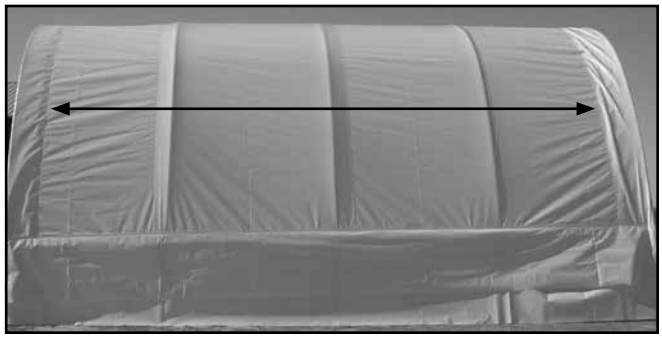

Shelter shown above may be a different model and length. Photo used for illustration purposes only.

NOTE: Maintain an even distance between the end rafter and the PVC conduit as the strap is tightened.

Also check that the bonnet portion of the main cover overlaps the end rafters evenly at both ends *before* stretching the cover. Check this periodically as the cover is stretched.

If the side straps are too tight and prevent the cover from stretching end-to-end, loosen but do not remove the straps as needed and continue.

13. Once the strap is tight at one end, cut it to length (if needed) and tie it to the other leg of the same end rafter.
14. At each end of the stretch hem strap, drive a Tek screw through the strap and into the back side of the rafter to secure the strap to the rafter. This helps keep the strap tight and in position.
15. Return to the other end of the frame and tighten that strapping (if needed) to complete the stretching of the main cover from end-to-end. Secure the strap using a Tek screw at each end (Step 14).
16. Continue by tightening the side ratchets.

TIGHTEN THE SIDE RATCHETS

Verify that the cover is in the desired position and centered on the frame. (Loosen and reposition if needed.) Continue with these steps to tighten the side ratchets.

1. Move to the side ratchets attached to each leg of one rafter. Begin at an inside rafter near the center of the frame.
2. With an assistant at one side ratchet and someone at the other side ratchet on the same rafter, tighten the ratchets to secure the cover.

   Tightening the ratchets at the same time on the same rafter helps keep the cover centered and results in a more uniform appearance.
3. Move to another rafter and repeat the steps to tighten the side ratchets attached to that rafter.

   NOTE: If the strap builds up in the ratchet, loosen the ratchet, remove some of the strap, and retighten.
4. After all side ratchets are tight, position someone at each ratchet attached to the end rafter where the bonnet straps of the cover were previously inserted.

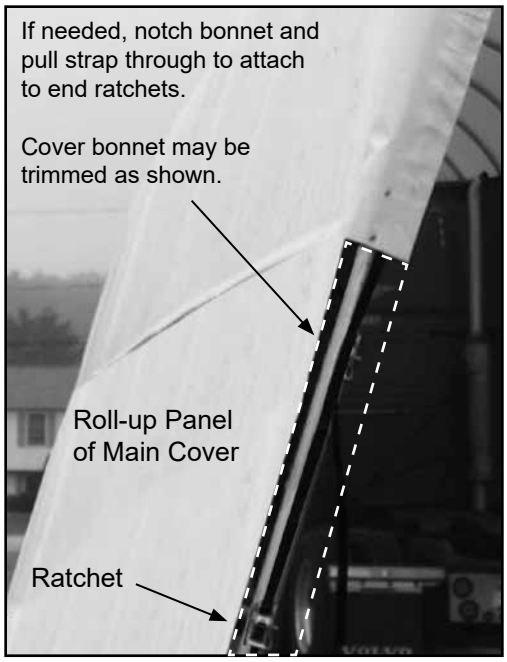

Photo shows the ratchet attached to the end rafter. This ratchet is used to secure the bonnet portion of the main cover.

5. Tighten the end ratchets to secure the bonnet portion of the main cover.
6. Move to the other end of the building and secure the bonnet at that end.
7. Continue by installing the Twist-of-the-Wrist Assembly.

TWIST-OF-THE-WRIST ASSEMBLY

Gather the parts:

- Aluminum channel (#102570) and drive handle (#102480)
- Gearbox (#103496) and gearbox double drive (#102717)
- Mounting plate (#103544) and bearing assembly (#102569)
- Threaded rod (#FAK26), 3/8" nuts (#FALB04B) and washers (#FAME08B)
- CC6212 fabric clips (Use half for each side.)
- 5/16" machine bolts (FAG336B) and 5/16" nuts
- Drill and drill bits

The Twist-of-the-Wrist Assembly is designed to roll up a portion of the sides of the cover. The following steps describe the installation of one assembly.

1. At the end where you will attach the gearbox, drill a 5/16" hole through the cover conduit 1/2" from the end of the conduit.
2. Insert a tubing adapter into the conduit and align the holes of the adapter with the drilled holes in the conduit.

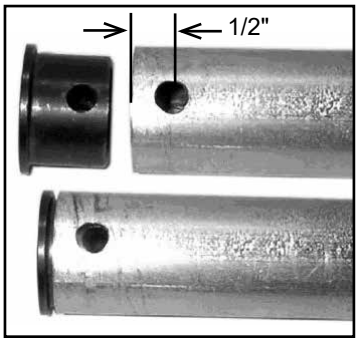

3. Select one aluminum channel and drill a 3/8" hole through the channel approximately 2" from the end and attach a threaded rod to the channel using a 3/8" nut on each side of the channel.

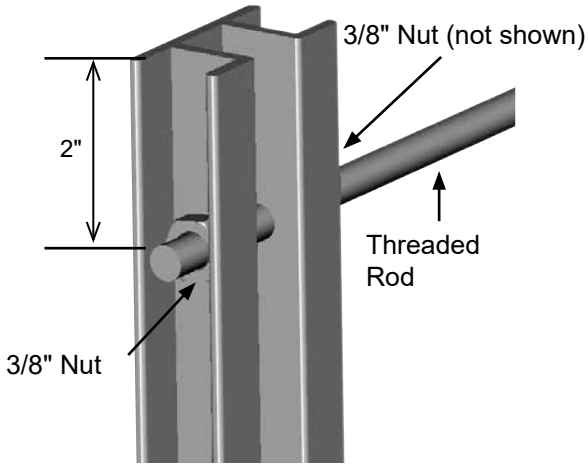

4. Position the channel along the rafter at the desired end of the building where the Twist-of-the-Wrist assembly will be located. Place the lower end of the channel an inch off the ground to allow free movement of the channel during the operation of the roll-up cover.
5. Secure the upper end of the channel by drilling a 3/8" hole through the end rafter and attach as shown. The lower end of the channel will "float" and is not attached.

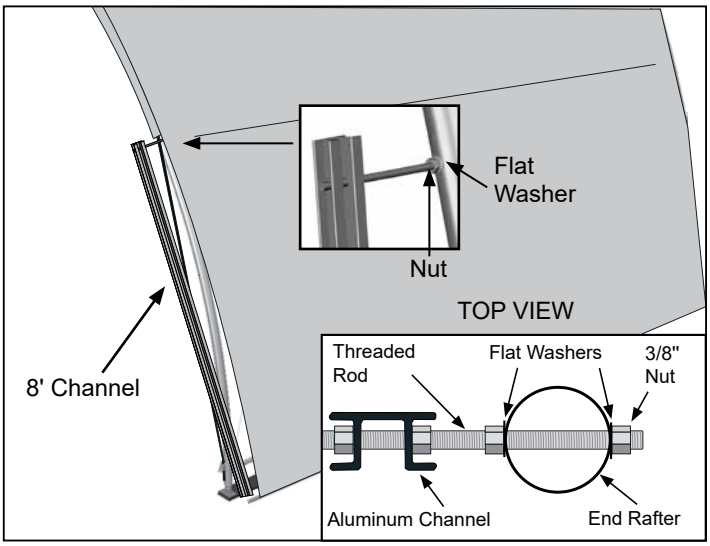

NOTE: Install a 3/8" flat washer between the 3/8" nut and the end rafter. *Frame shown for illustration.*

6. Select the bearing bracket and attach the bearings as needed. (In some instances, the bearings may come already attached.) Assemble as follows if needed:

   Single bearings are attached to the sides of the bracket and double bearings to the middle portion of the bracket. Use 1/4" hex bolts and locknuts as needed. Install a flat washer on both sides of each bearing to insure proper operation of bearings and the assembly.

   Install the longer bolts with bearings on the side of the bracket that has the two holes. Install these *before* installing the double bearing assembles. See the figures below.
7. For the spacers on the long bolts, insert a 5/16" nut over each bolt. *These nuts are used as spacers only.*

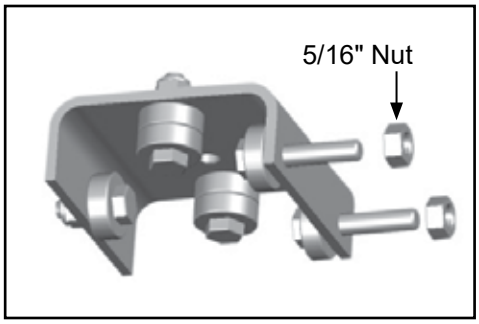

8. Slide the Twist-of-the-Wrist mounting plate over the long bolts and secure the plate with two lock nuts.

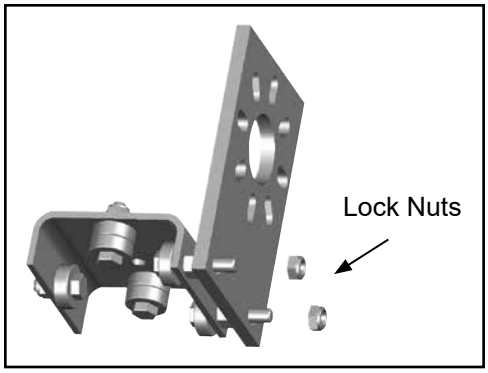

9. Attach the Twist-of-the-Wrist gearbox to the mounting plate using hex head bolts.

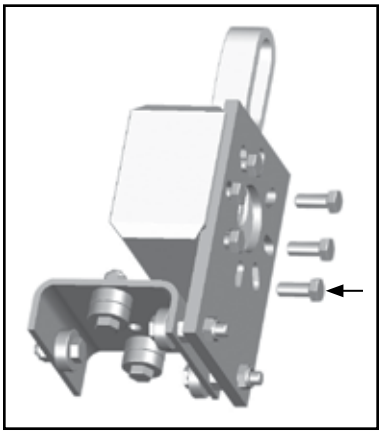

10. Using a 5/16" machine bolt and 5/16" nut, attach the square shaft to a tubing adapter. (Carriage bolt is shown for illustration. Use an FAG336B machine bolt.)

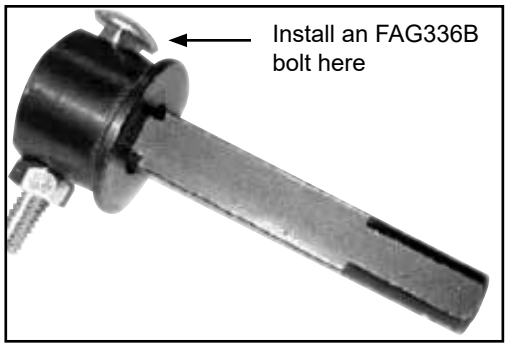

11. Slide the square shaft through the Twist-of-the-Wrist gearbox.

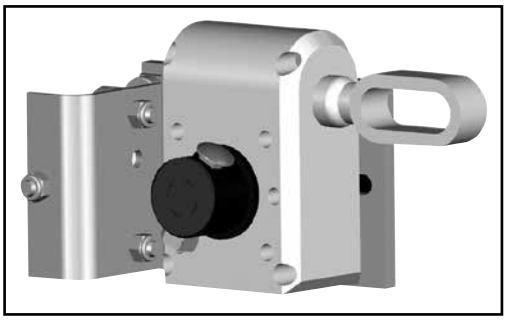

12. Slide the Twist-of-the-Wrist assembly onto the aluminum channel from the ground end. (This is the free end of the channel.)

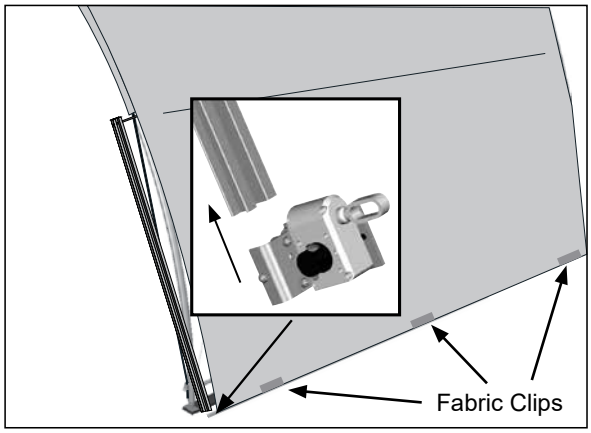

13. Adjust the roll-up cover conduit so that it reaches the gearbox and *secure the cover to the conduit* using half of the CC6212 fabric clips and Tek screws.

14. Roll the conduit toward the frame and up to the gearbox to wrap the excess cover onto the conduit.

15. Attach the rolled conduit to the square shaft of the assembly by inserting a 5/16" x 2-1/2" bolt through the hole in the conduit and tubing adapter. Tighten the nut.

    NOTE: It may be necessary to trim the conduit and cover to the proper length so that it aligns with the gearbox. Adapt these instructions to your application.

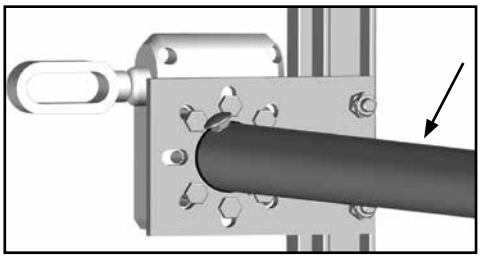

16. Attach the crank handle to the Twist-of-the-Wrist assembly. (Cover is not shown in the above diagram.)

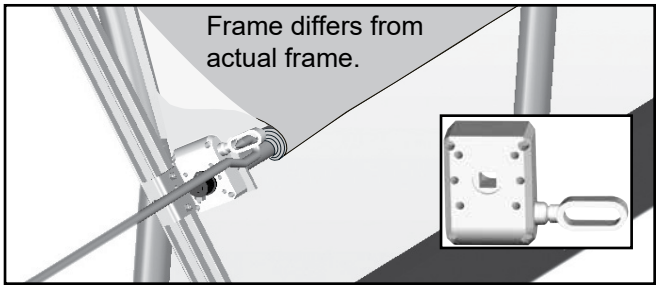

17. Test the operation of the Twist-of-the-Wrist assembly.

    NOTE: If the cover rolls in the desired direction, but you want to turn the crank in the opposite direction for the same result, unbolt, reposition the gearbox, and remount it on the same side of the mounting bracket.

INSTALL ANTI-BILLOW ROPES

Gather the parts:

- Anti-billow rope (#CC5310b)
- Fender washers 1/4" (#FAMF01b)
- Tek screws
- 5/16" Eye bolts (#FA2071) and 5/16" nuts (#FALB02b)

Install anti-billow rope in short sections along each side. Do not install as a single length tied at each end. Complete the following steps to install the ropes.

1. Using the Twist-of-the-Wrist assembly, roll up the sidewall so that it is a few inches above the ground.
2. Drill a 5/16" hole in the end rafter below the end clamp. Install an eye bolt and washer through the hole and secure with a nut and washer.

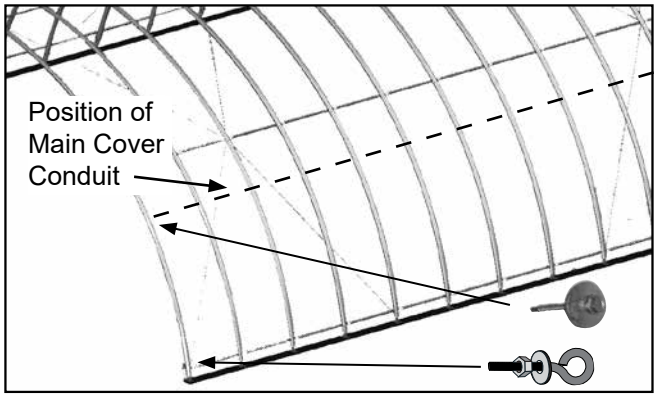

Cover and end panel are not shown for clarity.

3. Move up the rafter leg to the main cover conduit and install a Tek screw and fender washer through the cover material and into the main cover conduit. Do not tighten Tek screw completely.
4. Move to the bottom of the second rafter and install another eye bolt below the cross connector.
5. Move up to the cover conduit at the next rafter and insert a Tek screw and a fender washer into the cover conduit. Do not tighten Tek screw completely.
6. Repeat steps 2-5 using the following photo as a pattern guide. Dashed line shows the rope location.

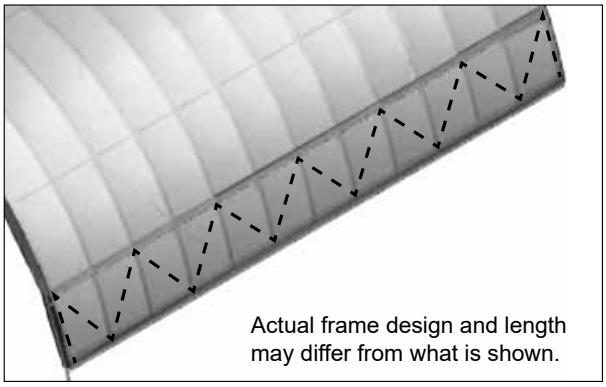

NOTE: Divide eye bolts in half and use accordingly on each side.

7. Once all eye bolts and Tek screws are installed in the proper locations, use the Twist-of-the-Wrist assembly to roll up the side panel to its highest position.
8. Take the free end of the rope and thread it through the eyebolt at an end rafter. Next, run it up and over the Tek screw attached to the cover conduit at the same end rafter.

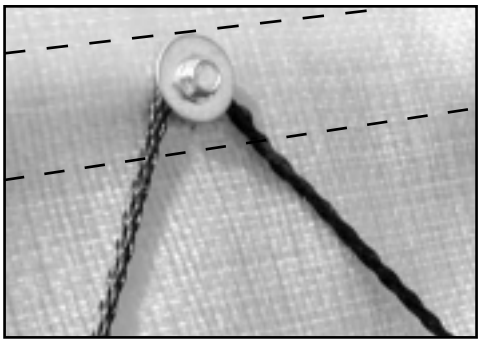

Dashed line identifies cover conduit position.

9. Determine where you want to end the first section of rope and cut the rope to length when you reach that point.
10. Tie the rope at one end, pull it tight, and secure the remaining end.

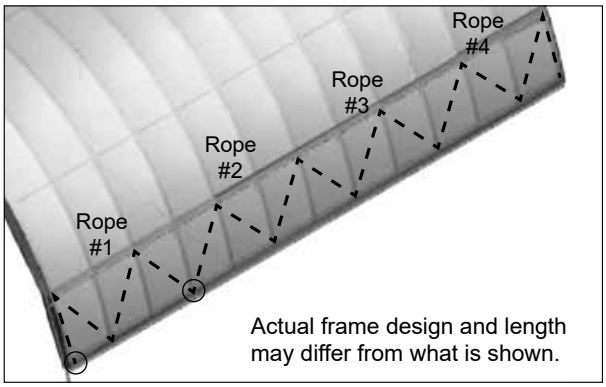

Dotted line represents the anti-billow rope. Circles identify the ends of Rope #1. Actual number of individual ropes along the side may differ.

11. Continue installation by running the rope in short sections over the Tek screws and through eyebolts until you reach the end of the building. See previous steps.
12. Test the operation of the side panel.
13. Repeat all of the above procedures for the remaining roll-up side for the building.
14. Read the care and maintenance information that follows.

SHELTER CARE AND MAINTENANCE

Proper care and maintenance of your shelter is important. Check the following items periodically to properly maintain your shelter:

- Regularly check the main cover and panels (if equipped) to see that these remain tight and in proper repair.
- Check connections and all fasteners to verify that they remain tight.
- Do not climb or stand on the shelter at anytime.
- Remove debris and objects that may accumulate on the shelter. Use tools that will not damage the cover when removing debris.
- Remove snow to prevent excess accumulation. Use tools that will not damage the cover when removing snow. Do not allow snow to accumulate on the cover.
- Check the contents of the shelter to verify that nothing is touching the cover or the side panels that could cause damage.
- Check the anchoring system to ensure that all components are tight and in good repair.
- Replace all worn or damaged parts promptly.
- If the shelter is moved, inspect all parts and connections before reassembling.
- For replacement or missing parts, call 1.800.245.9881 for assistance.

NOTE: With the exception of Truss Arch buildings, ClearSpan™ shelters *do not* have any tested loading criteria.

Space below is reserved for customer notes.

ClearSpan

QUICK START GUIDE

26' Wide Manure/Compost Building

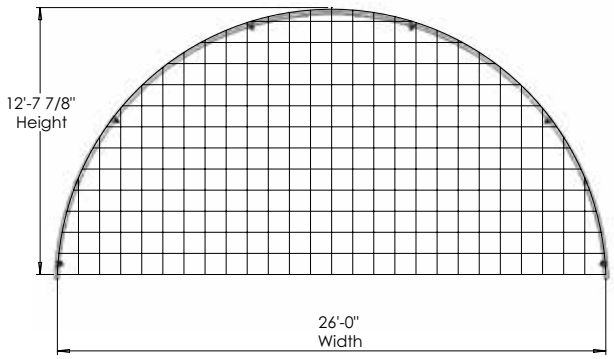

FRONT

Grid Represents 12" Squares

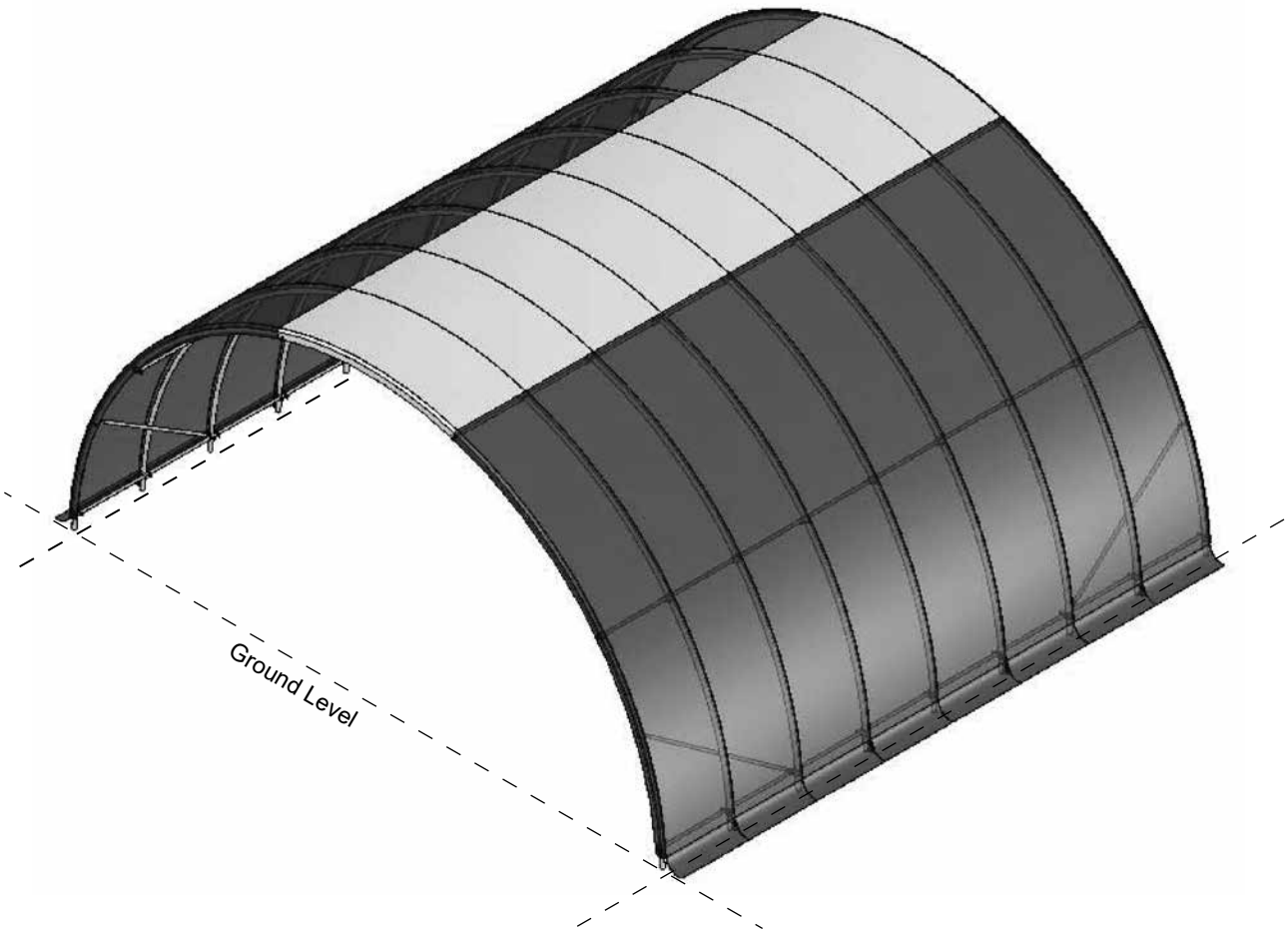

Cover and frame shown may differ from actual frame.

FRONT PROFILE

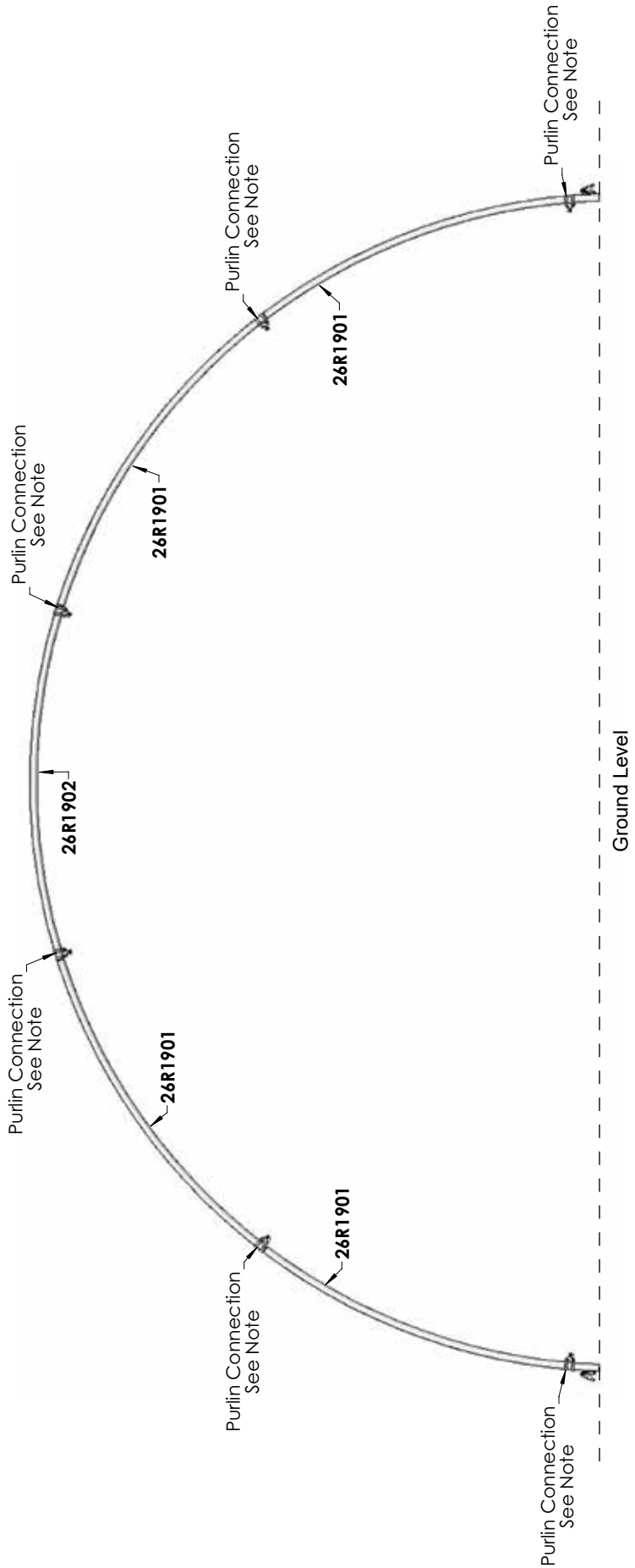

Purlin Connection Note

Purlin connected to end rafters using **102857** clamp - See View 1

Purlin connected to mid rafters using **102547** connector - See View 3

SIDE PROFILE - PB02600R3

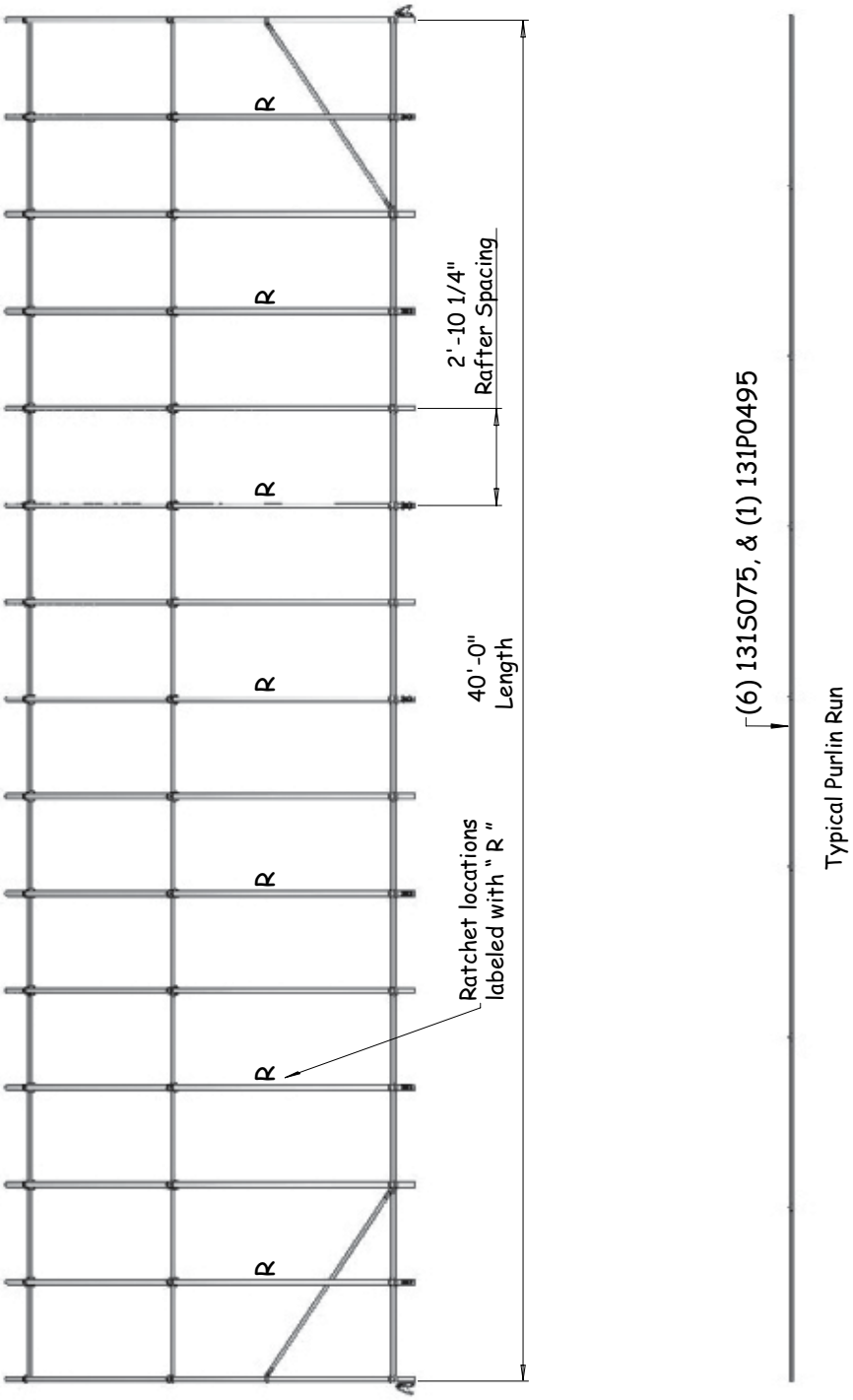

SIDE PROFILE - PB02600R4

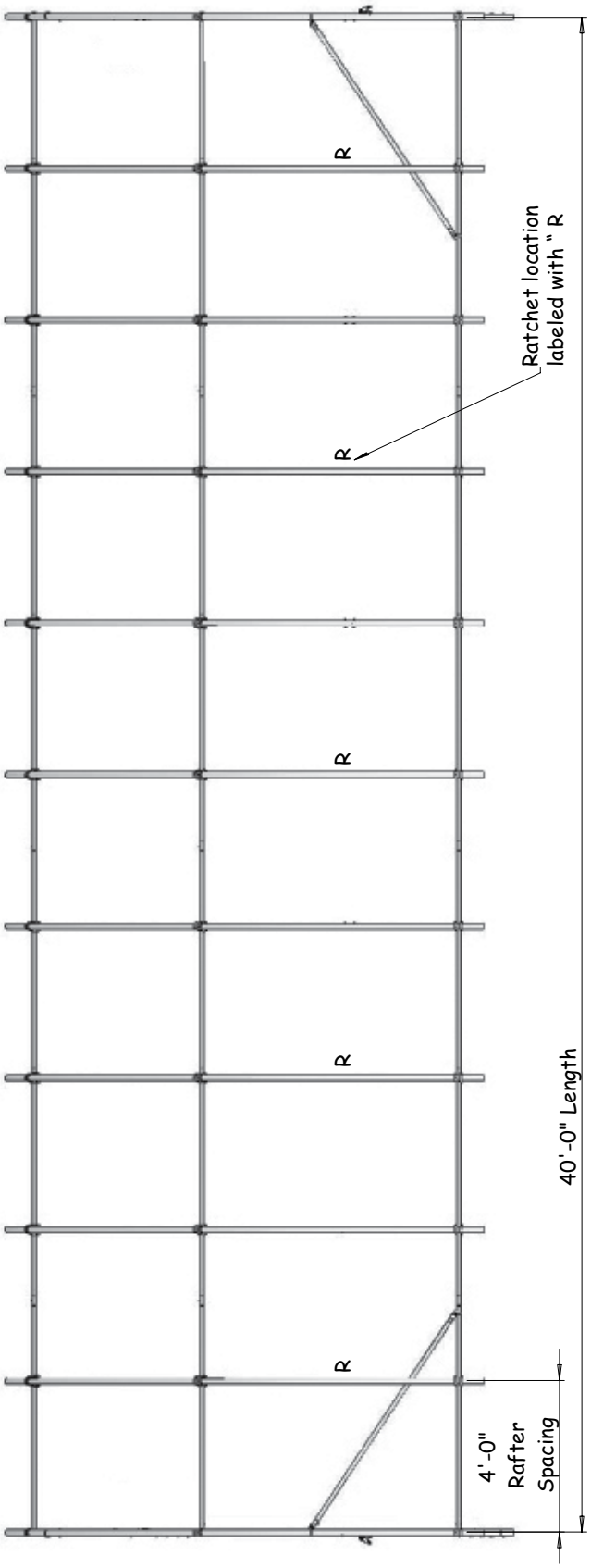

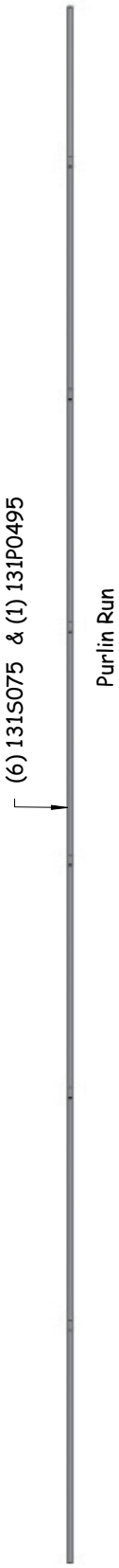

SIDE PROFILE - PB02602R3

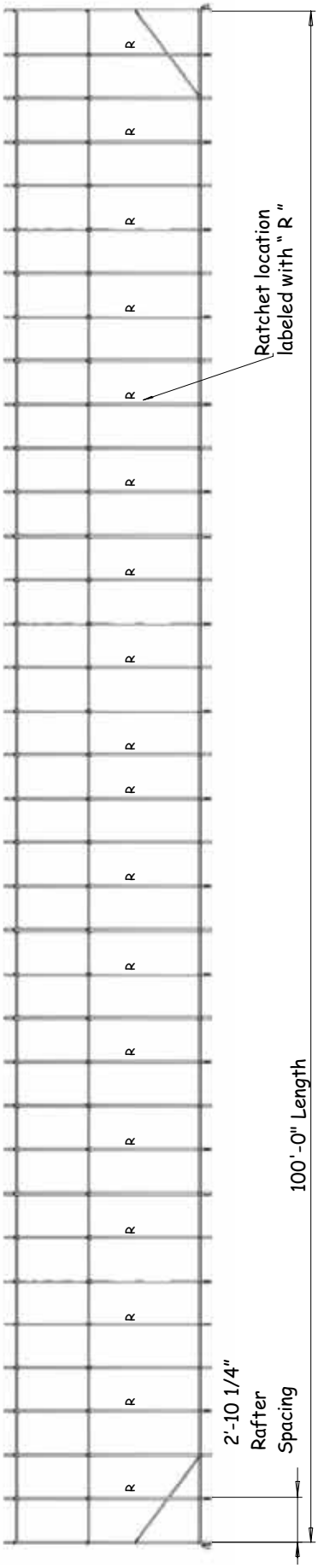

SIDE PROFILE - PB02602R4

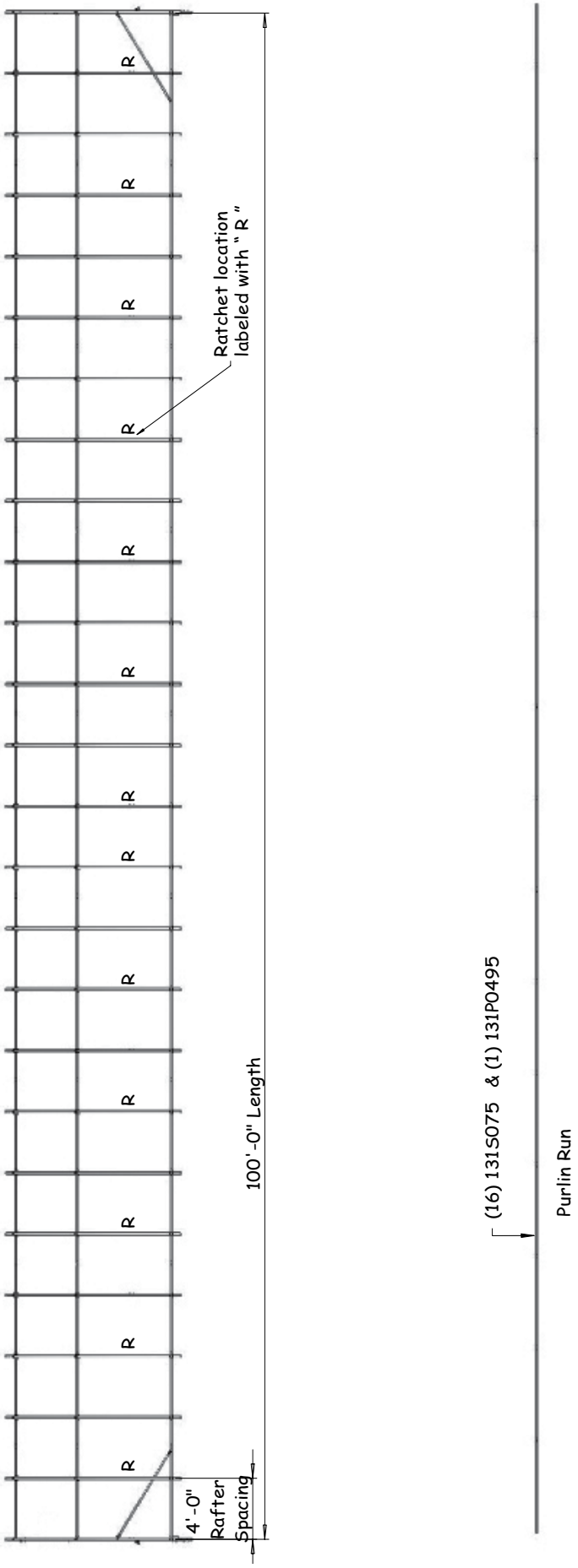

SIDE PROFILE - PB02604R3

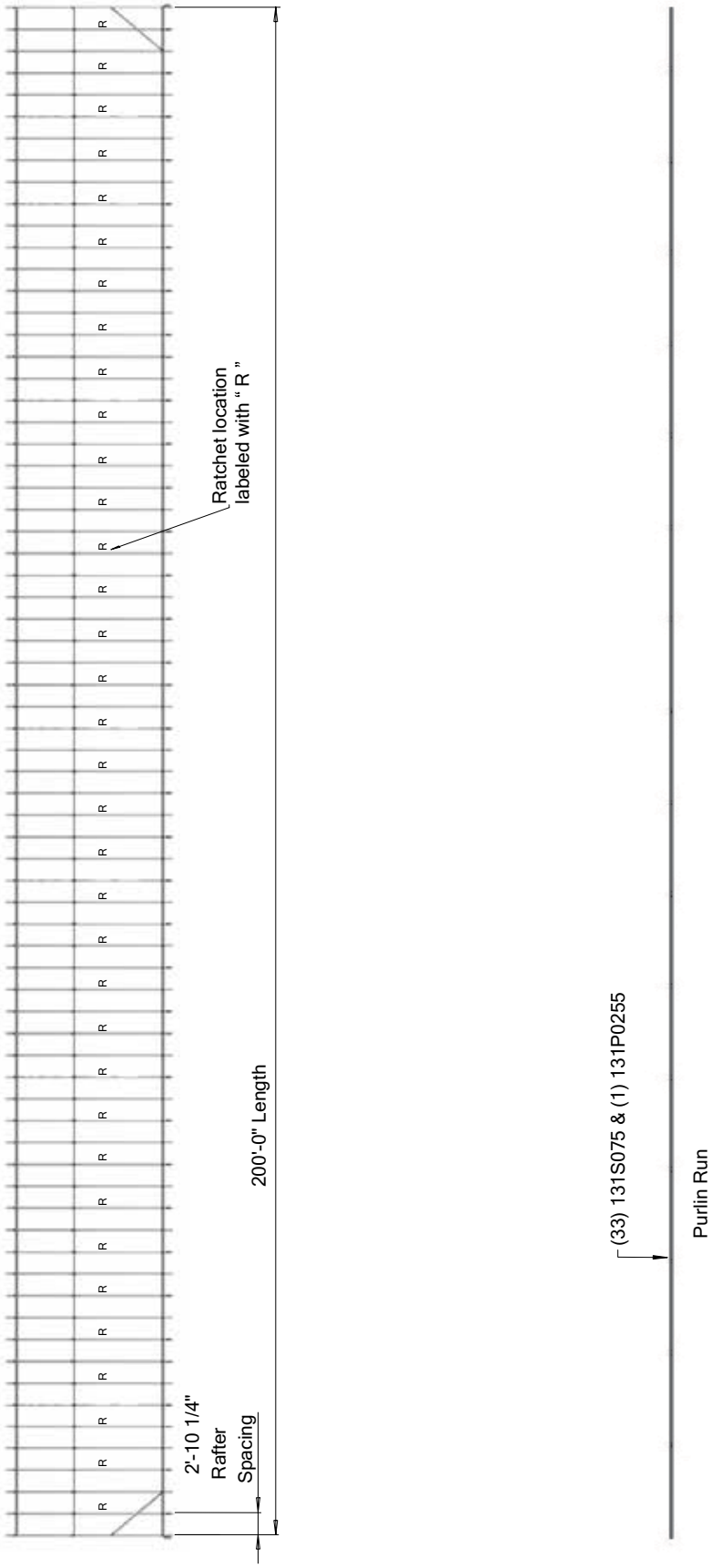

SIDE PROFILE - PB02604R4

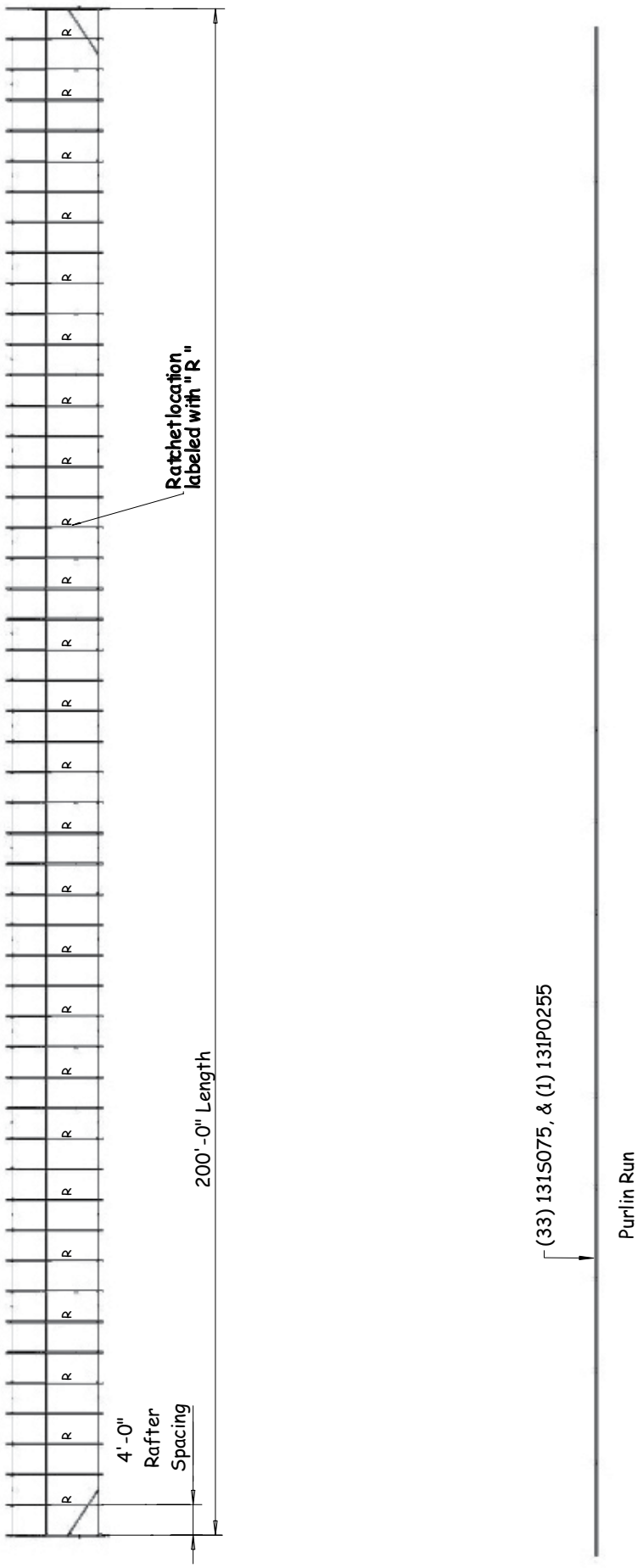

CONNECTIONS

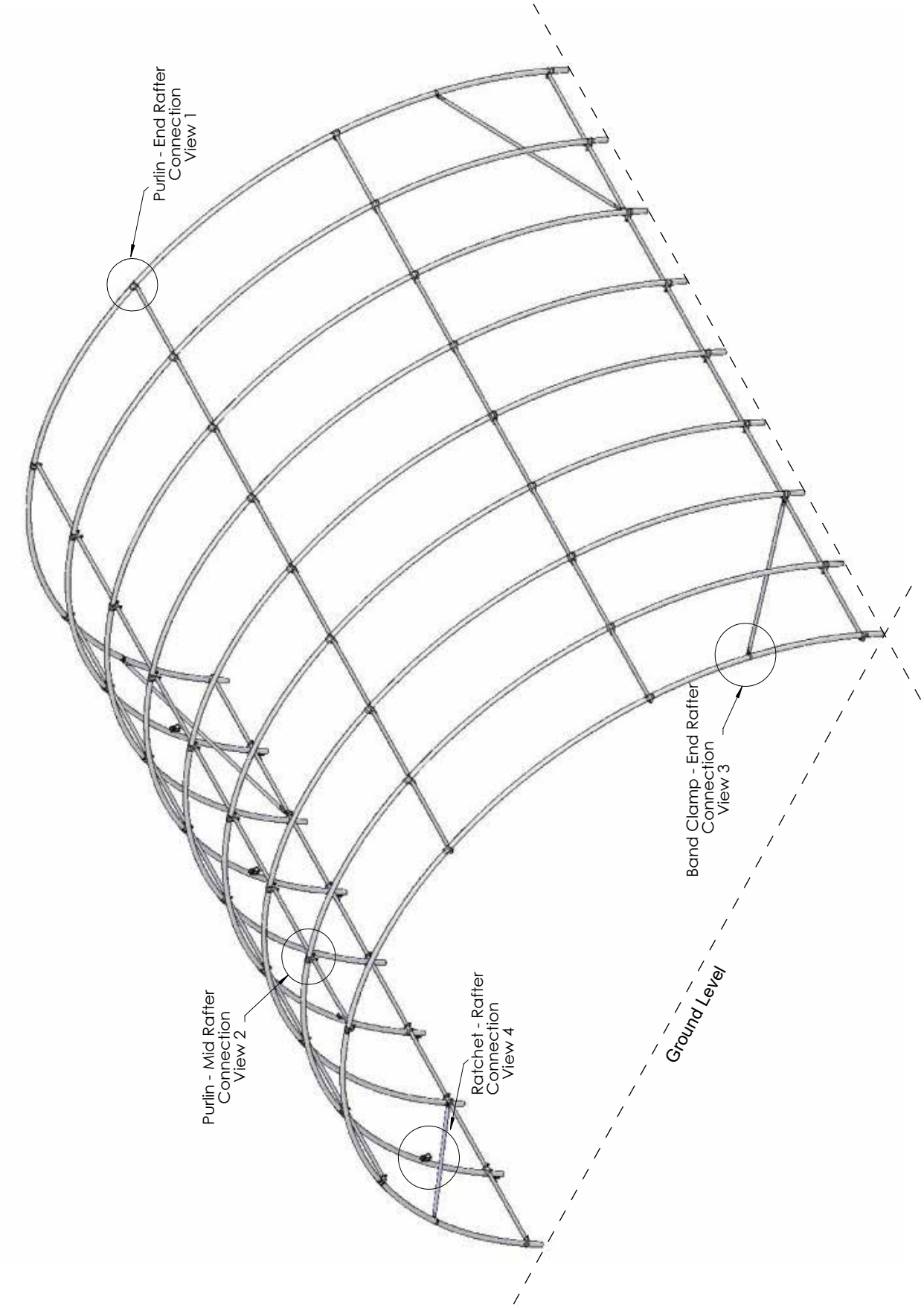

CONNECTION - DETAILS

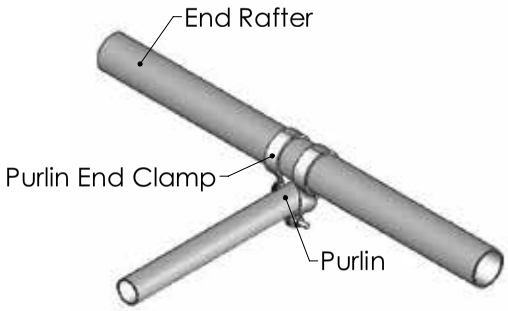

View 1
Purlin - End Rafter

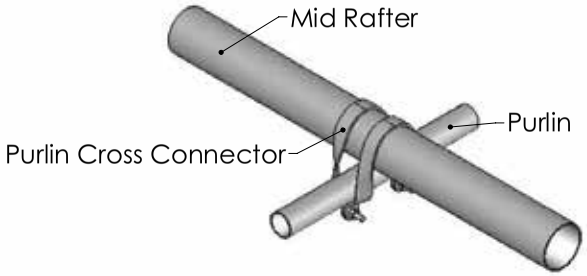

View 2
Purlin - Mid Rafter

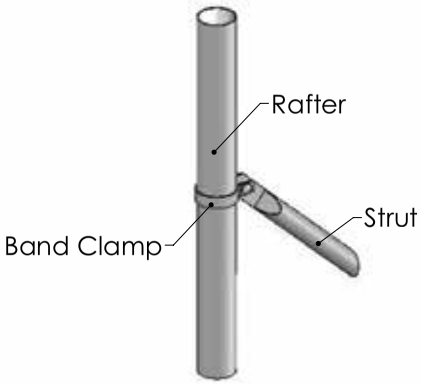

View 3
Band Clamp - End Rafter

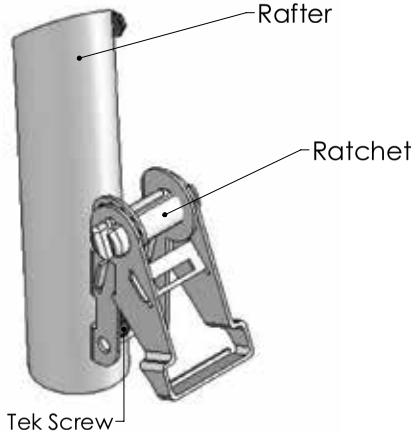

View 4
Ratchet - Rafter